This item was submitted to Loughborough's Research Repository by the author.
Items in Figshare are protected by copyright, with all rights reserved, unless otherwise indicated.

On the eigensolution of elastically connected columns

PLEASE CITE THE PUBLISHED VERSION

PUBLISHER

International Symposium on Vibrations of Continuous Systems

VERSION

VoR (Version of Record)

PUBLISHER STATEMENT

This work is made available according to the conditions of the Creative Commons Attribution-NonCommercial-NoDerivatives 4.0 International (CC BY-NC-ND 4.0) licence. Full details of this licence are available at: https://creativecommons.org/licenses/by-nc-nd/4.0/

LICENCE

CC BY-NC-ND 4.0

REPOSITORY RECORD

Howson, W.P., and Andrew Watson. 2015. “On the Eigensolution of Elastically Connected Columns”. figshare. https://hdl.handle.net/2134/19380.

ISVCS10, 10th International Symposium on Vibrations of Continuous Systems
Stanley Hotel, Estes Park, Colorado, USA, July 26 - 31, 2015

On the eigensolution of elastically connected columns

W. Paul Howson* **and Andrew Watson#**

* Independent Consultant
Gwanwyn, Craig Penlline, CF717RT, UK
w.p.howson@gmail.com

Dept. of Aero. and Auto. Engineering
Loughborough University
Loughborough, LE11 3TU, UK
a.watson@lboro.ac.uk

Introduction

Consideration is given to determining the eigensolution of a class of structures comprising n suitably related parallel columns that are connected to each other, and possibly also to foundations, by uniformly distributed Winkler interfaces of unequal stiffness. For conciseness, the body of the work is written in the context of elastic critical buckling. However, since the duality of the eigenproblem posed by buckling and vibration is well known, the extension to vibration is straightforward.

Initially the coupled fourth order differential equations that define the system are developed from first principles and arranged in the form of a generalized symmetric linear eigenvalue problem. Exact solution of these equations leads to n, uncoupled substitute systems, each of which yields an infinite number of critical buckling loads that, when arranged in ascending order, comprise the complete spectrum of critical buckling loads of the original problem. Thus, if only the fundamental critical buckling load is required, then only one substitute system needs to be solved.

Each substitute system is relatively simple and describes the buckling of a single unified member, but supported on a Winkler foundation of different magnitude in each case. However, the exact solutions required from each substitute system necessitate the closed form solution of a transcendental eigenvalue problem. This is achieved in the present case by utilizing an exact elastic stiffness matrix in conjunction with the Wittrick-Williams algorithm, which guarantees that any desired critical buckling load can be calculated to any desired accuracy with the certain knowledge that none have been missed. The corresponding modes of vibration are then recovered by back substitution for each substitute system and subsequently related back to the individual members of the original structure. This approach also enables some of the powerful features of the stiffness method to be utilized to model more complex structures. A simple example is given to clarify the approach.

Theory

Figure 1 defines the structural configuration and the positive directions of the member forces and displacements, from which the equations of vertical and moment equilibrium for typical member i can be deduced straightforwardly. These are presented with the appropriate constitutive relationship in Equations (1)-(2)

$$-Q_i + (Q_i + \frac{dQ_i}{dx}dx) + k_i dx V_{i-1} - (k_i + k_{i-1}) dx V_i + k_{i+1} dx V_{i+1} = 0 \tag{1}$$

$$Q_i dx + M_i - (M_i + \frac{dM_i}{dx}dx) + P_i \frac{dV_i}{dx}dx = 0 \qquad M_i = -E_i I_i \frac{d^2 V_i}{dx^2} \tag{2}$$

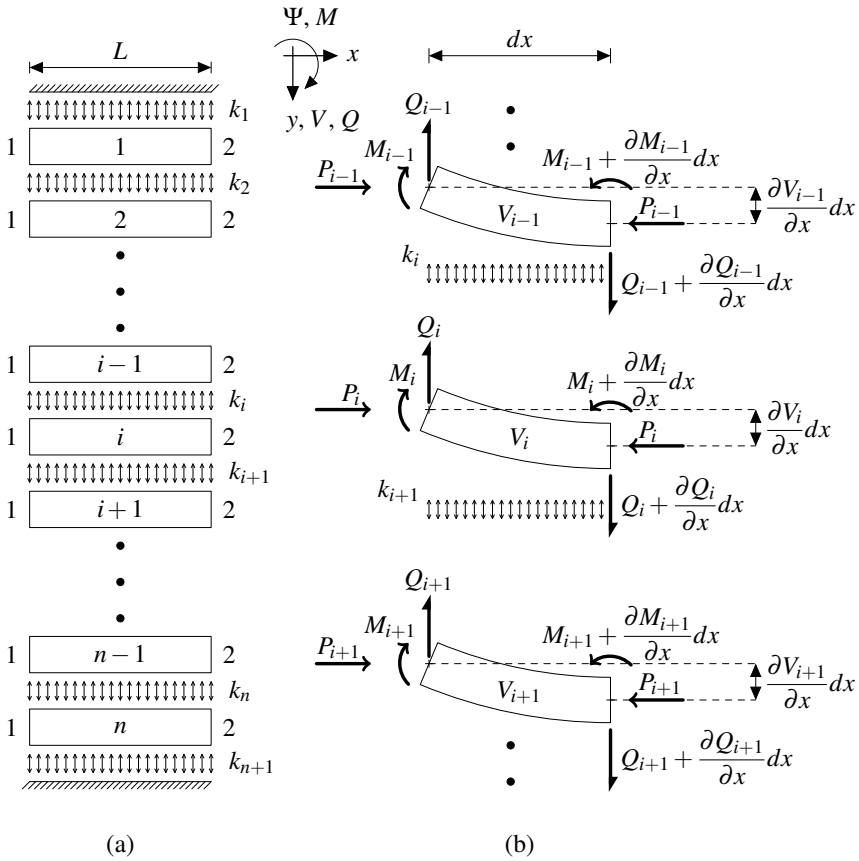

Figure 1: (a) General structure orientation. k_i is a typical Winkler stiffness per unit length. (b) Positive member forces and displacements relating to an elemental length of typical member i.

Eliminating Q_i and M_i and introducing the non-dimensional length parameter $\xi = x/L$ yields

$$-\kappa_i[D^4 + {p_i}^2 D^2]V_i + k_i V_{i-1} - (k_i + k_{i+1})V_i + k_{i+1}V_{i+1} = 0 \tag{3}$$

where

$$D = \frac{d}{d\xi}, \qquad \kappa_i = \frac{E_i I_i}{L^4}, \qquad {p_i}^2 = \frac{P_i L^2}{E_i I_i} \tag{4}$$

The current approach now requires that ${p_i}^2$ is a constant for each member. i.e. that

$${p_i}^2 = p^2 \tag{5}$$

Equation (3) can then be written for a general member as

$$-k_i V_{i-1} + (k_i + k_{i+1})V_i - k_{i+1}V_{i+1} - \kappa_i \lambda V_i = 0 \tag{6}$$

where

$$\lambda = -[D^4 + p^2 D^2] \tag{7}$$

Hence the corresponding equations for the first ($i = 1$) and last ($i = n$) members are, respectively

$$(k_1 + k_2)V_1 - k_2 V_2 - \kappa_1 \lambda V_1 = 0 \tag{8}$$

and

$$-k_n V_{n-1} + (k_n + k_{n+1})V_n - \kappa_n \lambda V_n = 0 \tag{9}$$

A complete set of equations for an n level system can now be assembled from Equations (6), (8) and (9)

$$\left\{\begin{bmatrix} k_1+k_2 & -k_2 & & & \\ & \ddots & & & \\ & -k_i & k_i+k_{i+1} & -k_{i+1} & \\ & & & \ddots & \\ & & & -k_n & k_n+k_{n+1} \end{bmatrix} - \lambda \begin{bmatrix} \kappa_1 & & & & \\ & \ddots & & & \\ & & \kappa_i & & \\ & & & \ddots & \\ & & & & \kappa_n \end{bmatrix}\right\} \begin{bmatrix} V_1 \\ \vdots \\ V_i \\ \vdots \\ V_n \end{bmatrix} = \begin{bmatrix} 0 \\ \vdots \\ 0 \\ \vdots \\ 0 \end{bmatrix} \tag{10}$$

where zeros have been omitted for clarity. Equation (10) can therefore be written for any appropriate formulation as

$$(\mathbf{k} - \lambda\,\kappa)\mathbf{V} = 0 \tag{11}$$

The form of Equation (11) is that of a generalized symmetric linear eigenvalue problem, for which a number of standard routines are available for calculating the eigenvalues, λ, and corresponding eigenvectors, $\mathbf{V}$.

Substitute systems

The n values of λ that satisfy the linear eigenvalue problem define a family of second order differential operators that satisfy the original problem and which are given by Equation (7) as

$$D^4 + p^2D^2 = -\lambda_i \qquad i = 1,2,\ldots,n \tag{12}$$

Equation (12) can be assigned a physical context by noting that it is a property of such differential operators that they can be written as

$$[D^4 + p^2D^2]V = -\lambda_i V \qquad i = 1,2,\ldots,n \tag{13}$$

and hence that

$$[D^4 + p^2D^2 + \lambda_i]V = 0 \qquad i = 1,2,\ldots,n \tag{14}$$

and V is a typical lateral displacement.

Each of these equations now describe the elastic critical buckling of a single unified member, but supported on a Winkler foundation of different magnitude in each case. Equation (14) therefore represent n substitute systems, each of which yields an infinite number of critical buckling loads that, when arranged in ascending order, comprise the complete spectrum of critical buckling loads of the original problem. It therefore follows that when only the lowest critical buckling load is required, it is only necessary to solve the substitute system that contains the lowest linear eigenvalue obtained from Equations (10) and (11).

In the current context, each substitute system is solved by transforming to a stiffness formulation in conjunction with the Wittrick-Williams algorithm, the boundary conditions being the single, identical set imposed on each of the original members.

Example

The simple illustrative problem selected can be envisaged by considering Figure 1(a) as comprising five simply supported members ($n = 5$) with $k_i = \kappa_i = k$ $(i = 1,2,\ldots,5)$ and $k_6 = 0$. The five linear

eigenvalues and their corresponding eigenvectors that then stem from Equations (10) and (11) are given in Table 1.

Table 1: Linear eigenvalues and their corresponding eigenvectors.

		$V_{i,j}$				
i	λ_i	$j=1$	$j=2$	$j=3$	$j=4$	$j=5$
1	0.0810	0.2817	0.5406	0.7557	0.9096	0.9898
2	0.6903	0.7557	0.9898	0.5406	−0.2817	−0.9096
3	1.715	0.9898	0.2817	−0.9096	−0.5406	0.7557
4	2.831	0.9096	−0.7557	−0.2817	0.9898	−0.5406
5	3.683	0.5406	−0.9096	0.9898	−0.7557	0.2817

The first three of a possible infinite number of critical buckling load parameters, p^2, is then given in Table 2. Hence, the critical buckling loads in each member can be deduced from Equations (4) - (5).

Table 2: The first three critical buckling load parameters for each linear eigenvalue. The modal numbers are given in brackets.

	p^2 for each λ_i				
m	$i=1$	$i=2$	$i=3$	$i=4$	$i=5$
1	9.8778 (1)	9.9395 (2)	10.043 (3)	10.156 (4)	10.243 (5)
2	39.481 (6)	39.496 (7)	39.522 (8)	39.550 (9)	39.572 (10)
3	88.827 (11)	88.834 (12)	88.846 (13)	88.858 (14)	88.868 (15)

Mode shape recovery

The buckling mode shape of the original members can be recovered by multiplying the substitute system mode shape by the appropriate element of the appropriate linear eigenvector. Now it is clear that the substitute system mode shapes for a simply supported member are defined by

$$V = A\sin(m\pi\xi) \qquad m = 1,2,\ldots,\infty \tag{15}$$

where A is an arbitrary constant.

As an example, consider the eigenvector corresponding to the fourteenth critical load of the original structure. It can be seen from Table 2 that this corresponds to $p^2 = 88.858$, with $i = 4$ and $m = 3$. Thus the eigenvector defining the mode shapes of the five original members, top to bottom, is

$$\widetilde{\mathbf{V}} = A\mathbf{V}_{4,j}\sin(3\pi\xi) \qquad j = 1,2,\ldots,5 \qquad \text{or} \qquad \widetilde{\mathbf{V}} = A\begin{bmatrix} 0.9096 \\ -0.7557 \\ -0.2817 \\ 0.9898 \\ -0.5406 \end{bmatrix}\sin(3\pi\xi) \tag{16}$$