This item was submitted to Loughborough's Research Repository by the author.
Items in Figshare are protected by copyright, with all rights reserved, unless otherwise indicated.

Glucose diffusivity in cell culture medium used in tissue engineering bioreactor

PLEASE CITE THE PUBLISHED VERSION

http://www.ukpharmsci.org/default.asp

PUBLISHER

Academy of Pharmaceutical Sciences of Great Britain / © The Authors

VERSION

AM (Accepted Manuscript)

PUBLISHER STATEMENT

This work is made available according to the conditions of the Creative Commons Attribution-NonCommercial-NoDerivatives 4.0 International (CC BY-NC-ND 4.0) licence. Full details of this licence are available at: https://creativecommons.org/licenses/by-nc-nd/4.0/

LICENCE

CC BY-NC-ND 4.0

REPOSITORY RECORD

Wang, Shuai, Hazwani Suhaimi, and Diganta Bhusan Das. 2015. “Glucose Diffusivity in Cell Culture Medium Used in Tissue Engineering Bioreactor”. figshare. https://hdl.handle.net/2134/18468.

Glucose diffusivity in cell culture medium

S. Wang, H. Suhaimi and D. B. Das

Department of Chemical Engineering, Loughborough University, Loughborough, UK.

Introduction and Aim

Glucose diffusion in tissue engineering fluids is fundamental in tissue engineering. But there is a serious lack of data in the literature for glucose diffusivity in cell culture medium (CCM). Hence, the aim of this study is to measure glucose diffusivities in CCM and water (as reference).

Materials and Methods

1) Materials:

- D-glucose-anhydrous
- Cell culture medium (CCM)
- Polyvinylidene fluoride (PVDF) membranes (pore size 0.1µm) used as a diaphragm

2) *Diffusion cell design:* A diffusion cell (Figure 1) was built to determine the liquid diffusivities of glucose in both CCM and water at 27 and 37 ± 1 °C. The cell consisted of two compartments with 52.5 ml each of which. PVDF membrane was placed in between. Each cell had a stirrer shaft with 40 RPM, controlled by a motor. The whole apparatus was placed in a temperature-controlled box with an attached thermocouple.

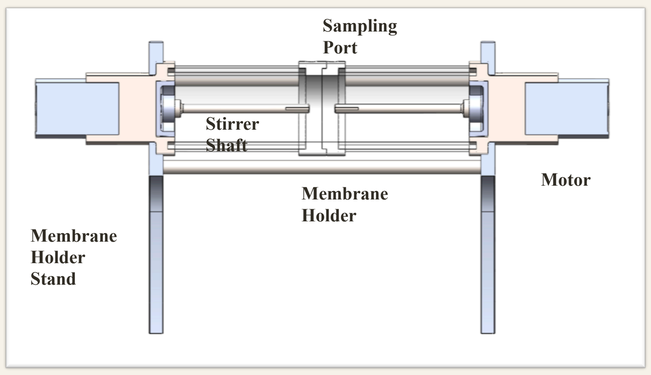

Figure 1. Cell design used in diffusion experiments

3) Calibration of the diffusion cell: Firstly, cell constant, β, (1.28 ×10^9 m^2/s) was determined, for diffusivity determination [2]. For this purpose, one of the compartments was filled with ethanol solution while the other with deionized water. The diffusion of ethanol was monitored by taking samples from both the compartments, at intervals of 1 h for a period of 5 h. The samples were analysed by a UV spectrophotometer (UV Mini 1240, Shimadzu, Japan) at a wavelength of 196.5 nm. The samples were poured back immediately after analysing. The cell constant, β ; was determined by the following equation:

$$D = \frac{1}{\beta t}\ln\left(\frac{C_{i,glucose-CCM/water} - C_{i,CCM/water}}{C_{f,glucose-CCM/water} - C_{f,CCM/water}}\right) \quad (1)$$

D- diffusion coefficient of ethanol in water
t -diffusion time,
C- the concentration of glucose and i and f denote the initial and final, respectively.
β- calculated by dividing the slope of the line with the diffusion coefficient of ethanol in water.

4) *Methodology for diffusion experiments:*
Both compartments were filled with glucose solution and CCM/water. Both solutions were warmed to 27 or 37 °C in the water bath for at least 60 min. An YSI glucose analyser was used to measure the glucose concentration at initial and final conditions. The glucose-in-water diffusion experiments were run for 24 and 22h at 27 and 37 ± 1 °C, respectively, while the glucose-in-CCM diffusion experiments were run for a period of 7–11 h for both temperatures. All diffusion experiments were repeated three times. The corresponding diffusion coefficients were calculated according to Eq. (1).

Results

From Table 1, it can be seen that the diffusion coefficient of glucose in CCM is lower at a given temperature due to a higher dynamic viscosity of CCM compared to water. This may also be due to the presence of other molecules in CCM hindering glucose diffusion; however, we believe that this is a minor effects as the glucose is a small molecule.

Table 1 Self-diffusivities of glucose in CCM and water.

	Temperature (°C)	Average dynamic viscosity (kg/m/s)	Experimentally determined	Stokes-Einstein's Equation $D=\frac{k_B T}{6\pi\eta r}$ [3]	Wilke-Chang's Equation $D=\frac{7.4\times10^{-8}(\phi M)^{\frac{1}{2}}T}{\eta V^{0.6}}$ [4]
			D(m^2/s)		
CCM	27 ± 1	1.306x 10^{-3}	5.67 ± 0.74 x 10^{-10}	4.61 x 10^{-10}	Not calculated due to lack of data
	37 ± 1	1.101x 10^{-3}	6.16 ± 1.25 x 10^{-10}	5.65 x 10^{-10}	Not calculated due to lack of data
Water	27 ± 1	8.653x 10^{-3}	6.98 ± 0.60 x 10^{-10}	6.96 x 10^{-10}	7.92 x 10^{-10}
	37 ± 1	6.495x 10^{-3}	9.58 ± 0.13 x 10^{-10}	9.58 x 10^{-10}	1.09 x 10^{-9}

*ϕ =2.26 (water)

Conclusions

The results show the diffusion coefficients of glucose in CCM are significantly reduced at a given temperature due to the larger dynamic viscosity of CCM compared to the ones in water. This may also be due to the multi-component interactions present in CCM and what we obtained is therefore a lumped effect from a number of inter-related phenomena.

Reference:

[1]H. Suhaimi, S. Wang, T. Thornton, D.B. Das, On glucose diffusivity of tissue engineering membranes and scaffolds, Chem. Eng. Sci. 126 (2015) 244–256.
[2] E.W. Washburn, International Critical Tables of Numerical Data, Physics, Chemistry and Technology, Vol. 5, McGraw Hill, New York, 1926, p. 63.
[3] Einstein A (1905) Investigations on the theory of brownian movement, Annalen der Physik, Vol. 17, 549-560
[4] Wilke CR, Chang P (1955) Correlation of diffusion coefficients in dilute solutions, AIChE Journal, Vol. 1, 264-270

Loughborough University