TechRxiv
Powered by IEEE

On Training Targets for Deep Learning Approaches to Clean Speech Magnitude Spectrum Estimation

This paper was downloaded from TechRxiv (https://www.techrxiv.org).

LICENSE

CC BY 4.0

SUBMISSION DATE / POSTED DATE

28-09-2020 / 12-02-2021

CITATION

Nicolson, Aaron; Paliwal, Kuldip K. (2020): On Training Targets for Deep Learning Approaches to Clean Speech Magnitude Spectrum Estimation. TechRxiv. Preprint. https://doi.org/10.36227/techrxiv.13012760.v2

DOI

10.36227/techrxiv.13012760.v2

On Training Targets for Deep Learning Approaches to Clean Speech Magnitude Spectrum Estimation

Aaron Nicolson[1, a] and Kuldip K. Paliwal[2, b]

[1] *Australian eHealth Research Centre, CSIRO, Herston, QLD, 4006, Australia*

[2] *Signal Processing Laboratory, Griffith University, Brisbane, Queensland 4111, Australia*

Estimation of the clean speech short-time magnitude spectrum (MS) is key for speech enhancement and separation. Moreover, an automatic speech recognition (ASR) system that employs a front-end relies on clean speech MS estimation to remain robust. Training targets for deep learning approaches to clean speech MS estimation fall into three categories: computational auditory scene analysis (CASA), MS, and minimum mean-square error (MMSE) estimator training targets. The choice of training target can have a significant impact on speech enhancement/separation and robust ASR performance. Motivated by this, we find which training target produces enhanced/separated speech at the highest quality and intelligibility, and which is best for an ASR front-end. Three different deep neural network (DNN) types and two datasets that include real-world non-stationary and coloured noise sources at multiple SNR levels were used for evaluation. Ten objective measures were employed, including the word error rate (WER) of the Deep Speech ASR system. We find that training targets that estimate the *a priori* signal-to-noise ratio (SNR) for MMSE estimators produce the highest objective quality scores. Moreover, we find that the gain of MMSE estimators and the ideal amplitude mask (IAM) produce the highest objective intelligibility scores and are most suitable for an ASR front-end.

©*2021 Acoustical Society of America.* [https://doi.org(DOI number)]

[XYZ] Pages: 1–22

I. INTRODUCTION

Speech corrupted by background noise (or noisy speech) can reduce the efficiency of communication between a speaker and a listener. The linguistic content of noisy speech can be misinterpreted by the listener or the background noise can cause fatigue. Factory welding, music, and non-target speakers are all examples of background noise sources (Loizou, 2013). The performance of speech processing systems, such as automatic speech recognition (ASR), automatic speaker verification (ASV), and automatic speaker identification (ASI) systems, can also be impacted by noisy speech (Le Prell and Clavier, 2017; Nicolson and Paliwal, 2020b). A system that can remove background noise or segregate the target speech (or clean speech) is thus indispensable for a speech processing system. Speech corrupted by background noise and reverberation from surface reflections (or noisy-reverberant speech) and systems with multiple microphones pose a more difficult task for such systems (Tawara *et al.*, 2019; Zhao *et al.*, 2017). For simplicity, this study focuses on non-reverberant noisy speech recorded using a single-microphone (or single-channel noisy speech).

The objective of speech enhancement is to improve the perceived quality and intelligibility of noisy speech. Speech enhancement algorithms accomplish this task by suppressing background noise without distorting the speech (Loizou, 2013). They are used to suppress background noise during phone calls, conference calls, and are used in hearing aid devices. A popular approach is to use an estimator of the clean speech that is derived from statistical models and an optimisation criteria. The Wiener filter (WF) optimally estimates, in the mean-squared error (MSE) sense, the discrete Fourier transform (DFT) coefficients of the clean speech—when the clean speech and noise DFT coefficients are assumed to be independent Gaussian random variables (Lim and Oppenheim, 1979). The minimum mean-square error (MMSE) short-time spectral amplitude (MMSE-STSA) and MMSE log-spectral amplitude (MMSE-LSA) estimators differ from the WF by optimally estimating the clean speech magnitude and log-magnitude spectra, respectively (Ephraim and Malah, 1984, 1985). While the WF is a linear estimator that depends solely on the *a priori* signal-to-noise ratio (SNR), the MMSE-STSA and MMSE-LSA estimators are non-linear estimators that depend on both the *a priori* and *a posteriori* SNR. Other prominent estimators assume super-Gaussian clean speech and noise priors (Martin, 2005) or employ a perceptually motivated optimisation criteria (Loizou, 2005). We refer to estimators that use the MSE as the optimisation criteria collectively as MMSE estimators henceforth.

An alternative to speech enhancement is speech separation (or segregation)—a special case of source separation where the target speech is segregated from the

[a] aaron.nicolson@griffithuni.edu.au

[b] k.paliwal@griffith.edu.au

noisy speech. Source separation is performed using computational auditory scene analysis (CASA)—the computational task of segregating mixtures of sound sources (Wang and Brown, 2006). One approach to speech separation is to classify each time-frequency (TF) component of noisy speech as either speech or noise dominant (Wang, 2005). This is realised by using the ideal binary mask (IBM) as the objective of CASA, which reduces speech separation to a binary classification problem. The IBM can be used to attenuate the noise-dominant TF components. In practice, however, a noisy speech TF component can contain a ratio of speech and noise. Instead of a hard label, a soft label can be used to segregate the target speech in a noisy speech TF component (Srinivasan *et al.*, 2006). This is realised by using the ideal ratio mask (IRM) as the objective of CASA, which has the same form as the gain of the square-root WF (SRWF) (Lim and Oppenheim, 1979).

While subjective listening tests conducted under stringent conditions are the gold standard for the evaluation of enhanced/separated speech quality and intelligibility, they are costly and time consuming (Hu and Loizou, 2008). Thus, objective measures of quality and intelligibility are often used as an alternative. For objective quality, perceptual evaluation of speech quality (PESQ) is commonly used in the literature (Rix *et al.*, 2001). However, PESQ was developed for the purpose of evaluating the distortions introduced by speech codecs and communication channels—not for the distortions introduced by speech enhancement/separation. Perceptual objective listening quality analysis (POLQA) is a later generation of PESQ that considers enhanced/separated speech and wideband audio (Beerends *et al.*, 2013). However, POLQA is not open-source, causing its use to be less frequent than other objective quality measures. In Hu and Loizou (2008), several composite objective quality measures were developed specifically for the evaluation of the signal distortion (CSIG), background noise intrusiveness (CBAK), and overall signal quality (COVL) of enhanced/separated speech. Their correlation with subjective scores was higher than that of previous objective quality measures, including PESQ. The signal-to-distortion ratio (SDR) (Vincent *et al.*, 2006) and the scale-invariant SDR (SI-SDR) (Roux *et al.*, 2019) are two commonly used objective quality measures that indicate the amount of distortion between the enhanced/separated and clean speech. For objective intelligibility, short-time objective intelligibility (STOI) is commonly used and demonstrates a high correlation with subjective scores (Taal *et al.*, 2011). Extended STOI (ESTOI) builds upon STOI by not assuming mutual independence between frequency bands and by incorporating the spectral correlation between 400 ms length spectrograms of the enhanced/separated and clean speech (Jensen and Taal, 2016). The word error rate (WER) of an ASR system can also be used to objectively evaluate the intelligibility of enhanced/separated speech (Thomas-Stonell *et al.*, 1998).

Currently, deep learning approaches are at the forefront of speech enhancement and separation. Deep neural networks (DNNs) provide a non-linear map from a given noisy speech representation to a target representation. DNNs were first employed for IBM estimation, where a feedforward neural network (FNN) provided learned features to linear support vector machines (SVMs) (Wang and Wang, 2013). It was found that the use of a DNN enabled the system to generalise to unobserved speakers and noise sources. FNNs were later employed for IRM estimation, where it was found that an FNN-IRM estimator is able to outperfrom an FNN-IBM estimator when used as a front-end for ASR (Narayanan and Wang, 2013). An FNN was later used to estimate the clean speech magnitude spectrum (MS), which was found to outperform the combination of the MMSE-LSA estimator and the improved minima controlled recursive averaging (IMCRA) noise estimation approach (Cohen, 2003; Xu *et al.*, 2015). In a study by Wang *et al.* (Wang *et al.*, 2014), the IBM, IRM, MS, and ideal amplitude mask (IAM) were compared as training targets, where the IAM is the ratio of the clean speech MS to the noisy speech MS. It was found that the IRM and IAM as the training target produced higher objective quality and intelligibility scores than the IBM and the MS. However, the study was limited by its use of only PESQ and STOI as objective measures. In Nicolson and Paliwal (2019a), a deep learning approach to *a priori* SNR estimation improved the performance of MMSE estimators. It was found that the *a priori* SNR training target produces higher objective quality scores than the IRM, with the IRM producing higher objective intelligibility scores. However, this study was also limited as objective scores were computed using only a wideband extension of PESQ (Morioka *et al.*, 2005) and STOI.

The aforementioned training targets utilise only the magnitude of each TF component. However, there are a set of training targets that incorporate the phase of each TF component. The phase sensitive mask (PSM) is an extension of the IAM that includes the phase difference between each clean and noisy speech TF component (Erdogan *et al.*, 2015). Results in (Williamson *et al.*, 2016) indicate that the PSM is able to outperform the IRM. The complex IRM (cIRM) is a complex TF mask that utilises both the real and imaginary components of the target speech and noise DFT coefficients (Williamson *et al.*, 2016). Results indicate that the cIRM is able to outperform the PSM and IRM in terms of objective quality and intelligibility. In Pascual *et al.* (2017), clean speech time-domain samples were used as the training target. However, results in (Williamson *et al.*, 2016) indicate that the PSM, cIRM, and IRM are able to attain higher objective quality and intelligibility scores than clean speech time-domain samples.

Current methods used to increase the robustness of an ASR system include 1) utilising a deep learning approach to speech enhancement/separation as a front-end for noisy speech pre-processing, and 2) multi-condition training (Zhang *et al.*, 2018). It has been found that utilising multi-condition training or a deep learning-based

speech enhancement/separation front-end significantly improves the robustness of an ASR system, with the combination of both methods providing the best performance (Narayanan and Wang, 2013). In this study, we concentrate solely on deep learning-based speech enhancement/separation front-ends. Features used as input to current ASR acoustic models are derived from the MS (Kriman *et al.*, 2020; Moritz *et al.*, 2020; Wang *et al.*, 2020). These include mel-scale filterbank, gammatone filterbank, and cepstral-domain features (Schluter *et al.*, 2007). When using a deep learning-based speech enhancement/separation front-end, such features are computed from the enhanced/separated speech MS (Nicolson and Paliwal, 2019b). This means that estimating the phase of the clean speech does not improve the robustness of current ASR systems.

The aim of this study is to determine which training target is best for clean speech MS estimation—in the context of speech enhancement/separation and robust ASR performance. Thus, we exclude training targets that make use of the short-time phase spectrum—in order to keep this study concise. We also propose to jointly estimate the *a priori* and *a posteriori* SNR—to increase the performance of the MMSE-STSA and MMSE-LSA estimators. Additionally, we propose to use the gain of an MMSE estimator as a training target, as motivated by the use of the IRM as the training target (which has the same form as the gain of the SRWF). We thus investigate three classes of training target for clean speech MS estimation: 1) CASA training targets, 2) MS training targets, and 3) MMSE estimator training targets (including *a priori* SNR, joint *a priori* and *a posteriori* SNR, and gain training targets). The DEMAND Voice Bank and Deep Xi datasets are included in the experiment setup, which include real-world non-stationary and coloured noise sources at multiple SNR levels. We also investigate which function for compressing the dynamic range of the training target values is best. We also assess multiple loss functions for the training targets. A temporal convolutional network (TCN), a recurrent neural network (RNN), and an attention-based network were used to evaluate each training target on different DNN architectures. Multiple objective quality and intelligibility measures are included in the experiment setup, including CSIG, CBAK, COVL, PESQ, segmental SNR (SegSNR) (Mermelstein, 1979), STOI, ESTOI, SDR, SI-SDR, and WER.

In this paper, we first describe the analysis, modification, and synthesis (AMS) framework (Section II). MMSE estimators are then described in Section III. In Section IV, the training targets are described. The experiment setup is described in Section V. The results are discussed in Section VI. Conclusions are drawn in Section VII.

II. ANALYSIS, MODIFICATION, & SYNTHESIS FRAMEWORK

The short-time Fourier analysis, modification, and synthesis (AMS) framework is used for speech enhancement/separation (Allen, 1977; Allen and Rabiner, 1977). The AMS framework consists of three stages: (1) the analysis stage, where noisy speech undergoes short-time Fourier transform (STFT) analysis; (2) the modification stage, where the noisy speech spectrum is modified; and (3) the synthesis stage, where the enhanced/separated speech is synthesised by applying the inverse STFT (ISTFT).

In the time-domain, the noisy speech signal, $x[n]$, is given by:

$$x[n] = s[n] + d[n], \tag{1}$$

where $s[n]$ and $d[n]$ denote the clean/target speech and uncorrelated additive noise, respectively, and n denotes the discrete-time sample. The noisy speech is analysed frame-wise using the running STFT (Vary and Martin, 2006):

$$X[l,k] = \sum_{n=0}^{N_d-1} x[n + lN_s]w[n]e^{-j2\pi nk/N_d}, \tag{2}$$

where l denotes the time-frame index, k denotes the discrete-frequency bin, N_d denotes the time-frame duration in discrete-time samples, N_s denotes the time-frame shift in discrete-time samples, and $w[n]$ is an analysis window function.

As we aim to modify the noisy speech MS, the polar form of the noisy speech spectrum is used:

$$X[l,k] = |X[l,k]|e^{j\angle X[l,k]}, \tag{3}$$

where $|X[l,k]|$ and $\angle X[l,k]$ denote the noisy speech magnitude and phase spectra, respectively. Similarly, the clean speech magnitude and phase spectra are denoted as $|S[l,k]|$ and $\angle S[l,k]$, respectively, and the noise magnitude and phase spectra are denoted as $|D[l,k]|$ and $\angle D[l,k]$, respectively. The modified spectrum is constructed by combining an estimate of the clean speech MS, $|\hat{S}[l,k]|$, with the noisy speech phase spectrum:

$$Y[l,k] = |\hat{S}[l,k]|e^{j\angle X[l,k]}. \tag{4}$$

The synthesis stage involves applying the ISTFT to the modified spectrum. First, the inverse discrete Fourier transform is applied to the modified spectrum:

$$y_f[l,n] = \frac{1}{N_d}\sum_{k=0}^{N_d-1} Y[l,k]e^{j2\pi nk/N_d}, \tag{5}$$

where $y_f[l,n]$ is the framed enhanced/separated speech. The overlap-add method is subsequently applied to produce the final enhanced/separated speech (Crochiere, 1980):

$$y[n] = \frac{\sum_{l=-\infty}^{\infty} y_f[l, n - lN_s]}{\sum_{l=-\infty}^{\infty} w[n - lN_s]}, \tag{6}$$

TABLE I. Gain for each MMSE estimator.

MMSE estimator	Gain function, $G[l,k]$
WF	$\frac{\xi[l,k]}{\xi[l,k]+1}$
SRWF	$\sqrt{\frac{\xi[l,k]}{\xi[l,k]+1}}$
CWF	$\frac{\sqrt{\xi[l,k]}}{\sqrt{\xi[l,k]+1}}$
MMSE-STSA	$\frac{\sqrt{\pi}}{2}\frac{\sqrt{\nu(n,k)}}{\gamma(n,k)}\exp\left(\frac{-\nu(n,k)}{2}\right)\Big((1+\nu(n,k))I_0\left(\frac{\nu(n,k)}{2}\right)+\nu(n,k)I_1\left(\frac{\nu(n,k)}{2}\right)\Big)$
MMSE-LSA	$\frac{\xi[l,k]}{\xi[l,k]+1}\exp\left\{\frac{1}{2}\int_{\nu[l,k]}^{\infty}\frac{e^{-t}}{t}dt\right\}$

where $w[n]$ is a synthesis window function. In this work, the Hamming window function is used for analysis and synthesis, with a time-frame duration of 32 ms ($N_d = 512$) and a time-frame shift of 16 ms ($N_s = 256$).

III. MMSE ESTIMATORS

The gain of an MMSE estimator is applied to the noisy speech MS to obtain a clean speech MS estimate for Equation (4):

$$|\hat{S}[l,k]| = G[l,k]\cdot|X[l,k]|. \tag{7}$$

The gain for the WF, SRWF, and constrained WF (CWF) (Loizou, 2013), as well as for the MMSE-STSA and MMSE-LSA estimator are defined in Table I, where $\nu[l,k] = \frac{\xi[l,k]}{\xi[l,k]+1}\gamma[l,k]$, $\xi[l,k]$ is the *a priori* SNR and $\gamma[l,k]$ is the *a posteriori* SNR. The *a priori* SNR is defined as

$$\xi[l,k] = \frac{\lambda_s[l,k]}{\lambda_d[l,k]}, \tag{8}$$

where $\lambda_s[l,k] = \mathrm{E}\{|S[l,k]|^2\}$ is the variance of the clean speech spectral component, and $\lambda_d[l,k] = \mathrm{E}\{|D[l,k]|^2\}$ is the variance of the noise spectral component. The *a posteriori* SNR is defined as

$$\gamma[l,k] = \frac{|X[l,k]|^2}{\lambda_d[l,k]}. \tag{9}$$

IV. TRAINING TARGETS

For speech enhancement/separation, a DNN learns to map the noisy speech MS to a training target that can be used to estimate the clean speech MS in Equation (4). Training targets with magnitude or power values tend to be difficult for a DNN to learn, as noted in Wang *et al.* (2014). Hence, a function must be used to compress their dynamic range—which we refer to as a compression function henceforth (referred to as a mapping function in Nicolson and Paliwal (2019a)). Here, the training target is denoted as $t[l,k]$. The training target can be computed from the clean speech and noise of the noisy speech in Equation (1), as they are observed during training. The training targets described in this section belong to one of three categories: CASA, MS, and MMSE estimator training targets. Some of the compression functions described in this section require statistics of the distribution of their input (e.g. mean and standard deviation). These statistics are estimated from a sample of the training set, as described in Subsection V D.

A. CASA training targets

CASA training targets, including the IBM, IRM, and IAM, are detailed here. The IBM is computed by applying a threshold to the instantaneous *a priori* SNR:

$$t[l,k] = \mathrm{IBM}[l,k] = \begin{cases} 1, & \text{if } \frac{|S[l,k]|^2}{|D[l,k]|^2} > 1 \\ 0, & \text{otherwise,} \end{cases} \tag{10}$$

where the threshold used here is equivalent to 0 dB (Wang, 2005). The IRM is computed as in Wang *et al.* (2014):

$$t[l,k] = \mathrm{IRM}[l,k] = \sqrt{\frac{|S[l,k]|^2}{|S[l,k]|^2 + |D[l,k]|^2}}. \tag{11}$$

The IAM is computed as in Erdogan *et al.* (2015):

$$t[l,k] = \mathrm{IAM}[l,k] = \frac{|S[l,k]|}{|X[l,k]|}, \tag{12}$$

where the values for the $\mathrm{IAM}[l,k]$ are clipped between 0 and 1. The masked magnitude spectrum approximation (mMSA) loss function can be used in combination with the IAM (Luo *et al.*, 2017):

$$\mathcal{L}_{\mathrm{mMSA}} = \frac{1}{LK}\sum_{l=1}^{L}\sum_{k=0}^{K-1}|X[l,k]|^2\big(\mathrm{IAM}[l,k] - \widehat{\mathrm{IAM}}[l,k]\big)^2, \tag{13}$$

which is equivalent to the masked signal approximation (mSA) loss function from Zheng and Zhang (2019, Equation 8) without the phase terms.

The IBM, IRM, and IAM are applied elementwise to each TF component of the noisy speech MS, for example:

$$|\hat{S}[l,k]| = |X[l,k]|\cdot\mathrm{IAM}[l,k]. \tag{14}$$

B. MS training targets

Here, training targets derived from the clean speech MS are described. The magnitude or power of the clean speech spectrum have been found difficult for a DNN to learn (Wang *et al.*, 2014; Xu *et al.*, 2015). We confirmed this in preliminary testing, where the loss during training would not converge with the magnitude or power values of the clean speech spectrum as the training target. This is likely due to the large dynamic range of the magnitude and power values. Hence, the clean speech MS must be compressed, which leads to the decibel value of the clean speech MS as a training target:

$$t[l,k] = |S_{\mathrm{dB}}[l,k]| = 20\log_{10}(|S[l,k]|). \tag{15}$$

Standardising $|S_{\mathrm{dB}}[l,k]|$ has also been found beneficial (Xu *et al.*, 2015):[1]

$$t[l,k] = z(|S_{\mathrm{dB}}[l,k]|) = \frac{|S_{\mathrm{dB}}[l,k]| - \mu_k}{\sigma_k}, \tag{16}$$

where μ_k and σ_k^2 are the mean and variance of the kth discrete-frequency bin, respectively. Min-max normalisation has also been found to facilitate training (Wang *et al.*, 2014):

$$t[l,k] = |S[l,k]|' = \frac{|S[l,k]| - \min_l(|S[l,k]|)}{\max_l(|S[l,k]|) - \min_l(|S[l,k]|)}, \tag{17}$$

where $\min_l(\cdot)$ and $\max_l(\cdot)$ find the minimum and maximum values over all time-frames for the kth discrete-frequency bin, respectively. Applying min-max normalisation to the decibel values also facilitates training (Wang *et al.*, 2014), where $|S_{\mathrm{dB}}[l,k]|'$ is formed by replacing $|S[l,k]|$ in Equation (17) with $|S_{\mathrm{dB}}[l,k]|$. Power compression can also be applied to the clean speech MS, as in Ephrat *et al.* (2018):

$$t[l,k] = |S[l,k]|^{\alpha}, \tag{18}$$

where $\alpha = 0.3$ from Ephrat *et al.* (2018) is used in this work.

We also investigate the cumulative distribution function (CDF) of $|S_{\mathrm{dB}}[l,k]|$ as a compression function, as motivated by Nicolson and Paliwal (2019a). The distribution of $|S_{\mathrm{dB}}[l,64]|$ is shown in Figure 1 (a), which indicates that $|S_{\mathrm{dB}}[l,k]|$ follows a normal distribution. Hence, we assume that $|S_{\mathrm{dB}}[l,k]|$ follows a normal distribution: $|S_{\mathrm{dB}}[l,k]| \sim \mathcal{N}(\mu_k, \sigma_k^2)$, where μ_k and σ_k^2 are the mean and variance of the kth discrete-frequency bin, respectively. The normal CDF of $|S_{\mathrm{dB}}[l,k]|$ is given by

$$t[l,k] = F(|S_{\mathrm{dB}}[l,k]|) = \frac{1}{2}\left[1 + \mathrm{erf}\left(\frac{|S_{\mathrm{dB}}[l,k]| - \mu_k}{\sigma_k\sqrt{2}}\right)\right], \tag{19}$$

where $\mathrm{erf}(\cdot)$ is the error function. We also investigated utilising the CDF of $|S[l,k]|$ as a compression function, where $|S[l,k]|$ is distributed exponentially. However, in preliminary testing we found that the loss during training would not converge.

C. MMSE estimator training targets

As in Nicolson and Paliwal (2019a), the instantaneous *a priori* SNR can be used as a training target. The instantaneous *a priori* SNR is computed by using the instantaneous values $|S[l,k]|^2$ and $|D[l,k]|^2$ in place of $\lambda_s[l,k]$ and $\lambda_d[l,k]$, respectively, in Equation (8). However, the power values of the instantaneous *a priori* SNR are difficult to train (Nicolson and Paliwal, 2019a). This was confirmed in preliminary testing, where the loss during training would not converge with the power values of the instantaneous *a priori* SNR as the training target. This is likely due to the large dynamic range of the power values. Thus, a compression function must be used

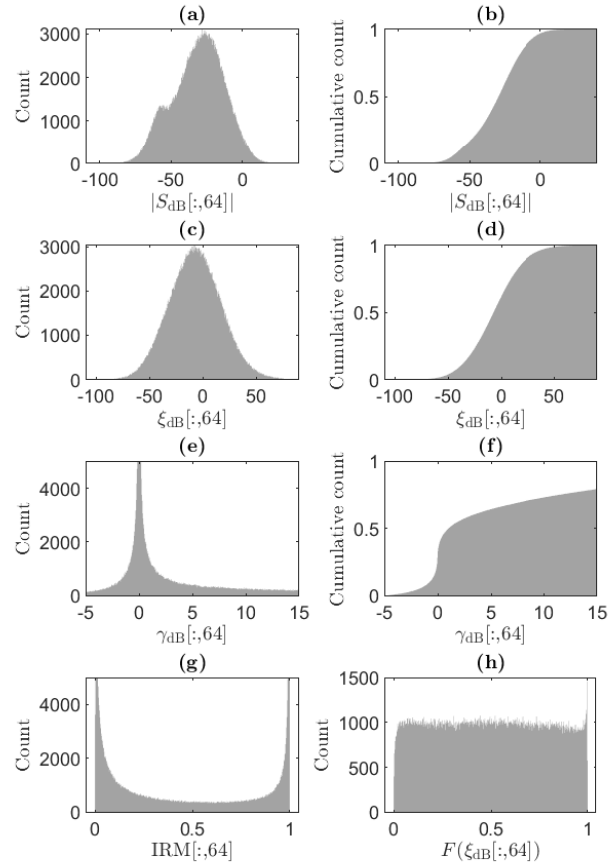

FIG. 1. The histogram of (a) $|S_{\mathrm{dB}}[l,64]|$, (c) $\xi_{\mathrm{dB}}[l,64]$, (e) $\gamma_{\mathrm{dB}}[l,64]$, (g) $\mathrm{IRM}[l,64]$, and (h) $F(\xi_{\mathrm{dB}}[l,64])$, and the normalised cumulative histogram of (b) $|S_{\mathrm{dB}}[l,64]|$, (d) $\xi_{\mathrm{dB}}[l,64]$, and (f) $\gamma_{\mathrm{dB}}[l,64]$. The histograms are found over the sample described in Subsection V D.

to facilitate training. As with the clean speech MS, the decibel value of the instantaneous *a priori* SNR can be used as a training target:

$$t[l,k] = \xi_{\mathrm{dB}}[l,k] = 10\log_{10}(\xi[l,k]). \tag{20}$$

An additional training target is formed by standardising $\xi_{\mathrm{dB}}[l,k]$, where $z(\xi_{\mathrm{dB}}[l,k])$ is formed by replacing $|S_{\mathrm{dB}}[l,k]|$ in Equation (16) with $\xi_{\mathrm{dB}}[l,k]$. We also apply min-max normalisation to $\xi[l,k]$ and $\xi_{\mathrm{dB}}[l,k]$, where $\xi[l,k]'$ and $\xi_{\mathrm{dB}}[l,k]'$ are formed by replacing $|S[l,k]|$ in Equation (17) with $\xi[l,k]$ and $\xi_{\mathrm{dB}}[l,k]$, respectively.

In Nicolson and Paliwal (2019a), the CDF of $\xi_{\mathrm{dB}}[l,k]$ was used as the compression function, as part of the Deep Xi framework.[2] It was assumed that $\xi_{\mathrm{dB}}[l,k]$ is distributed normally: $\xi_{\mathrm{dB}}[l,k] \sim \mathcal{N}(\mu_k, \sigma_k^2)$, where μ_k and σ_k^2 are the mean and variance of the kth discrete-frequency bin, respectively. The distribution of $\xi_{\mathrm{dB}}[l,64]$

is shown in Figure 1 (c). The normal CDF of $\xi_{\mathrm{dB}}[l,k]$ is given by

$$t[l,k] = F(\xi_{\mathrm{dB}}[l,k]) = \frac{1}{2}\left[1 + \mathrm{erf}\left(\frac{\xi_{\mathrm{dB}}[l,k] - \mu_k}{\sigma_k\sqrt{2}}\right)\right]. \tag{21}$$

For the Deep Xi framework, the maximum likelihood (ML) *a posteriori* SNR estimate is used with the MMSE-STSA and MMSE-LSA estimators: $\hat{\gamma}[l,k] = \xi[l,k] + 1$. While the MMSE-STSA and MMSE-LSA estimators largely rely on the *a priori* SNR, a small improvement may be realised by more accurately estimating the *a posteriori* SNR (Cappe, 1994). Motivated by this, we propose to jointly estimate both the *a priori* and *a posteriori* SNR. The decibel value of the instantaneous *a priori* and *a posteriori* SNR can be used as a training target:

$$t[l,k] = \left[\xi_{\mathrm{dB}}[l,k]; \gamma_{\mathrm{dB}}[l,k]\right], \tag{22}$$

where $[\cdot;\cdot]$ is the concatenation operation and $\gamma_{\mathrm{dB}}[l,k]$ is computed as per Equation (23).

$$\gamma_{\mathrm{dB}}[l,k] = 10\log_{10}(\gamma[l,k]). \tag{23}$$

We also apply min-max normalisation to $[\xi[l,k];\gamma[l,k]]$ and $[\xi_{\mathrm{dB}}[l,k];\gamma_{\mathrm{dB}}[l,k]]$, giving $[\xi[l,k]';\gamma[l,k]']$ and $[\xi_{\mathrm{dB}}[l,k]';\gamma_{\mathrm{dB}}[l,k]']$, respectively. $\gamma[l,k]'$ and $\gamma_{\mathrm{dB}}[l,k]'$ are formed by replacing $|S[l,k]|$ in Equation (17) with $\gamma[l,k]$ and $\gamma_{\mathrm{dB}}[l,k]$, respectively.

We also propose to use the CDF of $\xi_{\mathrm{dB}}[l,k]$ and $\gamma_{\mathrm{dB}}[l,k]$ as a compression function to form a training target:

$$t[l,k] = \left[F(\xi_{\mathrm{dB}}[l,k]); F(\gamma_{\mathrm{dB}}[l,k])\right]. \tag{24}$$

The distribution of $\gamma_{\mathrm{dB}}[l,64]$ is shown in Figure 1 (e), which indicates that $\gamma_{\mathrm{dB}}[l,k]$ follows a super-Gaussian distribution. Hence, we assume that $\gamma_{\mathrm{dB}}[l,k]$ follows a Laplace distribution: $\gamma_{\mathrm{dB}}[l,k]| \sim \mathrm{Laplace}(\zeta_k, b_k)$, where ζ_k and b_k are the location and scale parameters of the kth discrete-frequency bin, respectively. The Laplace CDF of $\gamma_{\mathrm{dB}}[l,k]$ is given by

$$F(\gamma_{\mathrm{dB}}[l,k]) = \frac{1}{2} + \frac{1}{2}\mathrm{sgn}(\gamma_{\mathrm{dB}}[l,k] - \zeta_k)\left(1 - \exp\left(\frac{|\gamma_{\mathrm{dB}}[l,k] - \zeta_k|}{b_k}\right)\right), \tag{25}$$

where $\mathrm{sgn}(\cdot)$ is the sign function.

We also propose to use the gain of an MMSE estimator as the training target, where the instantaneous *a priori* and *a posteriori* SNR are used to compute the gain. The SRWF gain has already been applied as a training target in the literature, in the form of the IRM. We thus extend this approach to include the gain of the WF ($G_{\mathrm{WF}}[l,k]$) and CWF ($G_{\mathrm{cWF}}[l,k]$), as well as the MMSE-STSA ($G_{\mathrm{MMSE-STSA}}[l,k]$) and MMSE-LSA ($G_{\mathrm{MMSE-LSA}}[l,k]$) estimators. The values for $G_{\mathrm{MMSE-STSA}}[l,k]$ and $G_{\mathrm{MMSE-LSA}}[l,k]$ are clipped between 0 and 1.

V. EXPERIMENT SETUP

A. Deep neural network: ResNet-TCN

A modified version of the residual network (ResNet) TCN from Zhang *et al.* (2020) is used to evaluate each training target.[3] The set of hyperparameters for ResNet-TCN used in this work are derived from Zhang *et al.* (2020). It is shown from input to output in Figure 2. Its input at time-frame l is $|\mathbf{X}_l| = \{|X[l,0]|, |X[l,1]|, \ldots, |X[l,N_d/2]|\}$, which is the 257-point single-sided noisy speech MS that includes the DC and Nyquist discrete-frequency bins. Its output at time-frame l is $\hat{\mathbf{t}}_l = \{\hat{t}[l,0], \hat{t}[l,1], \ldots, \hat{t}[l,N_d/2]\}$. The input is first transformed by **FC**, a fully-connected layer of size $d_{model} = 256$. Instead of applying layer normalisation (Ba *et al.*, 2016) followed by the rectifier linear function to **FC**, as in Zhang *et al.* (2020), we apply the rectifier linear activation function followed by layer normalisation without the scale and shift operations. This reduces overfitting, as demonstrated in Xu *et al.* (2019). The **FC** layer is followed by $B = 40$ bottleneck residual blocks, where $b = 1, 2, \ldots, B$ is the block index. Residual blocks are facilitated by adding the block's input to its output, preventing the vanishing and exploding gradient problems (He *et al.*, 2016).

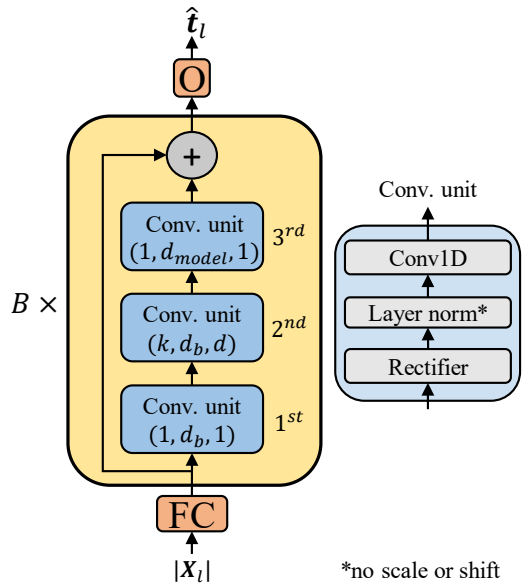

FIG. 2. (colour online) ResNet-TCN. The kernel size, output size, and dilation rate for each convolutional unit is denoted as (**kernel size**, **output size**, **dilation rate**).

Each block contains three one-dimensional causal dilated convolutional units. Here, we modify the pre-activation of the convolutional units in Zhang *et al.* (2020) by using the rectifier linear activation function followed by layer normalisation without the scale

and shift operations (again following Xu *et al.* (2019)). The kernel size, output size, and dilation rate for each convolutional unit is denoted in Figure 2 as (**kernel size**, **output size**, **dilation rate**). The first and third convolutional units have a kernel size of 1, whilst the second has a kernel size of $k = 3$. The first and second convolutional units have an output size of $d_b = 64$, whilst the third has an output size of d_{model}. The first and third convolutional units have a dilation rate of 1, while the second employs a dilation rate of d, providing a receptive field over previous time steps. The dilation rate for the second convolutional unit, d, is cycled as the block index, b, increases: $d = 2^{(b-1 \bmod (\log_2(D)+1)}$, where mod is the modulo operation, and $D = 16$ is the maximum dilation rate. This dilation rate scheme is similar to the one used for the Conv-TasNet (Luo and Mesgarani, 2019). The last block is followed by a fully-connected output layer, $\mathbf{O}$.

For training, the *Adam* algorithm (Kingma and Ba, 2014) with default hyper-parameters is used for gradient descent optimisation. Gradients are clipped between $[-1, 1]$. A mini-batch size of 8 noisy speech signals is used for each training iteration. The noisy speech signals for each mini-batch are computed on the fly as follows: each clean speech recording selected for the mini-batch is mixed with a random section of a randomly selected noise recording at a randomly selected SNR level from the set specified for the training set. The selection order for the clean speech recordings is randomised for each epoch. ResNet-TCN is implemented in TensorFlow 2.3.0 (Abadi *et al.*, 2015) and is available at `https://github.com/anicolson/DeepXi`. The training targets are also evaluated using an RNN and an attention-based DNN architecture, as described in Appendix A 2.

B. Output layer activation function and loss function

In Table II, we specify the output layer activation function and the loss function used for each training target. For $\{t[l, k] \in \mathbb{R} : 0 \leq t[l, k] \leq 1\}$, the sigmoid activation function is applied to the output layer, and mean squared error (MSE) and binary cross-entropy (BCE) are both investigated as the loss function (except for IAM, where mMSA is also evaluated). For all other cases, no activation function is applied to the output layer and MSE is investigated as the loss function.

C. Datasets

Separate models for each training target are trained and evaluated on the following datasets:

1. DEMAND Voice Bank dataset

The DEMAND Voice Bank dataset (Valentini-Botinhao *et al.*, 2016) has been used frequently as of late to evaluate deep learning approaches to speech enhancement/separation (Nikzad *et al.*, 2020). The training set includes clean speech recordings from 28 speakers of the Voice Bank corpus (Veaux *et al.*, 2013) (11 572 recordings). It also includes two synthetic noise sources (*speech-shaped noise* and *babble*, as described in Valentini-Botinhao *et al.* (2016)), as well as eight real-world noise recordings from the DEMAND dataset (Thiemann *et al.*, 2013). The clean speech and noise recordings are downsampled from 48 kHz to 16 kHz. The noisy speech signals for the training set are formed by mixing each clean speech recording with a random section of a randomly selected noise recording at a random SNR level from the set $\{0, 5, 10, 15\}$ (dB). This creates a set of 11 572 noisy speech signals for training. The test set includes 824 clean speech recordings of two speakers from the Voice Bank corpus—393 from $p232$ and 431 from $p257$ (Veaux *et al.*, 2013). Both speakers are separate from those selected for the training set. A total of 20 different conditions are used to create the noisy speech, including five noise sources from the DEMAND dataset (separate from those included in the training set), and 4 SNR levels: $\{2.5, 7.5, 12.5, 17.5\}$ (dB). The clean speech and noise recordings are downsampled from 48 kHz to 16 kHz prior to mixing. Approximately 20 different sentences for each speaker are used per condition, with the total number of noisy speech signals in the test set amounting to 824.

TABLE II. Range of values, output layer activation function, and loss function for each training target. The time-frame index, l, and the discrete-frequency bin, k, are omitted from the notation, for convenience. *****Denotes training targets with values that are clipped between 0 and 1.

Target, t	Range	Outp. activat.	Loss function
IBM	$[0, 1]$	Sigmoid	MSE or BCE
IRM	$[0, 1]$	Sigmoid	MSE or BCE
IAM*	$[0, 1]$	Sigmoid	MSE, BCE, or mMSA
$\lvert S\rvert'$	$[0, 1]$	Sigmoid	MSE or BCE
$\lvert S_{\text{dB}}\rvert$	$[-\infty, \infty]$	Linear	MSE
$z(\lvert S_{\text{dB}}\rvert)$	$[-\infty, \infty]$	Linear	MSE
$\lvert S_{\text{dB}}\rvert'$	$[0, 1]$	Sigmoid	MSE
$\lvert S\rvert^{0.3}$	$[0, \infty]$	Linear	MSE
$F(\lvert S_{\text{dB}}\rvert)$	$[0, 1]$	Sigmoid	MSE or BCE
ξ'	$[0, 1]$	Sigmoid	MSE or BCE
ξ_{dB}	$[-\infty, \infty]$	Linear	MSE
$z(\xi_{\text{dB}})$	$[-\infty, \infty]$	Linear	MSE
ξ'_{dB}	$[0, 1]$	Sigmoid	MSE or BCE
$F(\xi_{\text{dB}})$	$[0, 1]$	Sigmoid	MSE or BCE
$[\xi'; \gamma']$	$[0, 1]$	Sigmoid	MSE or BCE
$[\xi_{\text{dB}}; \gamma_{\text{dB}}]$	$[-\infty, \infty]$	Linear	MSE
$[\xi'_{\text{dB}}; \gamma'_{\text{dB}}]$	$[0, 1]$	Sigmoid	MSE or BCE
$[F(\xi_{\text{dB}}); F(\gamma_{\text{dB}})]$	$[0, 1]$	Sigmoid	MSE or BCE
G_{WF}	$[0, 1]$	Sigmoid	MSE or BCE
G_{cWF}	$[0, 1]$	Sigmoid	MSE or BCE
$G_{\text{MMSE-STSA}}$*	$[0, 1]$	Sigmoid	MSE or BCE
$G_{\text{MMSE-LSA}}$*	$[0, 1]$	Sigmoid	MSE or BCE

2. Deep Xi dataset

The Deep Xi dataset (Nicolson, 2020) is larger than the DEMAND Voice Bank dataset, with a wider range of conditions for training. The test set also allows for the evaluation of individual noise sources and SNR levels. For the training and validation sets, 69 708 clean

speech recordings from the CSTR VCTK (Veaux *et al.*, 2017) (41 169 recordings, speakers $p232$ and $p257$ are excluded) and the *train-clean-100* set of the Librispeech corpus (Panayotov *et al.*, 2015) (28 539 recordings) are used. The minimum, average, and maximum duration of the recordings is 1.4, 12.3, and 17.2, respectively, for the *train-clean-100* set and 1.2, 3.6, and 15.1, respectively, for the CSTR VCTK corpus. For the training and validation sets, noise recordings from the QUT-NOISE dataset (Dean *et al.*, 2010), the Nonspeech dataset (Hu and Wang, 2010), the RSG-10 dataset (*voice babble*, *F16*, and *factory welding* are excluded as they are used for the test set) (Steeneken and Geurtsen, 1988), the Urban Sound dataset (*street music* recording no. 26 270 is excluded as it is used for the test set) (Salamon *et al.*, 2014), the Environmental Background Noise dataset (Saki *et al.*, 2016), the noise set from the MUSAN corpus (Snyder *et al.*, 2015), multiple FreeSound packs,[4] and coloured noise recordings (with an α value ranging from -2 to 2 in increments of 0.25). Noise recordings that are over 30 seconds in length are split into 30 second or less segments. This gives a total of 17 458 noise recordings, each of a length less than or equal to 30 seconds. All clean speech and noise recordings are single-channel, with a sampling frequency of 16 kHz (recordings with a higher sampling frequency are downsampled to 16 kHz). The SNR levels from the set $\{q \in \mathbb{Z} | -10 \leq q \leq 20\}$ (dB), where q is the SNR level, are used for the training set. For the validation set, 1 000 clean speech and noise recordings are randomly selected (without replacement) and removed from the aforementioned clean speech and noise sets. Each clean speech recording is paired with one of the noise recordings. The clean speech recording is then mixed with a random section of the noise recordings at a randomly selected SNR level from the set $\{q \in \mathbb{Z} | -10 \leq q \leq 20\}$ (dB). This forms 1 000 noisy speech signals for the validation set.

For the test set, recordings of four real-world noise sources, including two non-stationary and two coloured, are included in the test set. The two real-world non-stationary noise sources include *voice babble* from the RSG-10 noise dataset (Steeneken and Geurtsen, 1988) and *street music* (recording no. 26 270) from the Urban Sound dataset (Salamon *et al.*, 2014). The two real-world coloured noise sources include *F16* and *factory welding* from the RSG-10 noise dataset (Steeneken and Geurtsen, 1988). 10 clean speech recordings are randomly selected (without replacement) from the *test-clean* set of the Librispeech corpus for each of the four noise recordings. The clean speech recordings from the *test-clean* set have a duration of up to 34 seconds. All clean speech and noise recordings are single-channel, with a sampling frequency of 16 kHz (recordings with a higher sampling frequency are downsampled to 16 kHz). To create the noisy speech, a random section of the noise recording is selected and mixed with the clean speech at the following SNR levels: $\{-5, 0, 5, 10, 15\}$ (dB). This creates a test set of 200 noisy speech signals.

TABLE III. Objective measures, what each assesses, and the range of their scores. For each measure, higher is better, except for WER.

Measure	Assesses	Range
CSIG (Hu and Loizou, 2008)	Quality	$[1, 5]$
CBAK (Hu and Loizou, 2008)	Quality	$[1, 5]$
COVL (Hu and Loizou, 2008)	Quality	$[1, 5]$
PESQ (Rix *et al.*, 2001)	Quality	$[-0.5, 4.5]$
STOI (Taal *et al.*, 2011)	Intelligibility	$[0, 100]\%$
ESTOI (Jensen and Taal, 2016)	Intelligibility	$[0, 100]\%$
SDR (Vincent *et al.*, 2006)	Quality	$[-\infty, \infty]$
SI-SDR (Roux *et al.*, 2019)	Quality	$[-\infty, \infty]$
SegSNR (Mermelstein, 1979)	Quality	$[-\infty, \infty]$
WER	Intelligibility	$[0, 100]\%$

D. Sample

The statistics required for some of the compression functions described in Section IV (μ_k, σ_k, $\min_l(\cdot)$, $\max_l(\cdot)$, ζ_k, and b_k) are estimated from a sample of 1 000 randomly selected training examples (statistics are found separately for each training set). For the Laplace CDF in Equation (25), ζ_k is assumed to be zero and b_k is estimated using values greater than ζ_k—as a larger proportion of $\gamma_{\text{dB}}[l, k]$ values are in the right tail (see Figure 1).

E. ASR system

Project DeepSpeech is an ASR system trained solely on clean speech (i.e. no multi-condition training is used).[5] It is an open source implementation of the Deep Speech ASR system (Hannun *et al.*, 2014). It uses 26 mel-frequency cepstral coefficients (MFCCs) as its input. It is used to evaluate the objective intelligibility of the training targets. It is also used to evaluate the front-end performance of each training target for robust ASR.

F. Objective quality and intelligibility measures

The objective quality and intelligibility measures used in this study to assess each training target are given in Table III. The WER is calculated by $\text{WER} = 100\frac{\mathcal{D}(H,R)}{N}$, where H is the hypothesis transcript, R is the reference transcript, and N number of words in R. $\mathcal{D}(H, R)$ is the Levenshtein distance between H, and R. The WER is given as a fraction from 0–1 or as a percentage.

VI. RESULTS AND DISCUSSION

In this section, we evaluate the speech enhancement/separation and robust ASR performance of each training target, as well as each compression and loss functions. The training targets are evaluated on the DEMAND Voice Bank and Deep Xi dataset. Epoch 125 and 150 for the DEMAND Voice Bank and Deep Xi datasets

were used for evaluation, respectively. The employed DNNs required more epochs for the validation loss to converge on the Deep Xi dataset. The time-frame index, l, and the discrete-frequency bin, k, are omitted from the notation henceforth, for convenience. Results for $|S|'$+MSE and $\left[\xi';\gamma'\right]$+MSE were not included as the training loss would not converge after repeated training runs. For difference testing, the two-sample t-test ($\alpha = 0.05$) is used henceforth. The speech enhancement/separation performance of the *a priori* SNR training targets are evaluated using the MMSE-LSA estimator and SRWF, for conciseness (joint *a priori* and *a posteriori* SNR training targets are evaluated using only the MMSE-LSA estimator). The MMSE-LSA estimator is chosen as it scores highly for each tested objective measure, as demonstrated in Appendix A 1. The SRWF is chosen as its gain has the same form as the IRM. This will reveal the advantages and disadvantages of estimating the gain over estimating the *a priori* and *a posteriori* SNR.

A. CASA vs. MS vs. MMSE training targets

First, we compare the objective quality and intelligibility scores of the three training target categories using the mean objective scores in Table IV. MMSE training targets produced the best objective scores for each measure, except STOI. MMSE training targets, namely the joint *a priori* and *a posteriori* SNR training targets, attained the best scores for all objective measures of quality (except CSIG, which was attained by G_{CWF} and $G_{\text{MMSE-STSA}}$), demonstrating their capacity to produce enhanced/separated speech at a high quality. A significant difference exists between the CBAK scores of $\left[F(\xi_{\text{dB}});F(\gamma_{\text{dB}})\right]$+BCE and all CASA and MS training targets, as well as $F(\xi_{\text{dB}})$+BCE and all CASA and MS training targets, demonstrating that *a priori* SNR and joint *a priori* and *a posteriori* SNR training targets are the best at suppressing background noise. MMSE training targets, in particular the gain training targets, achieved the best scores for ESTOI and WER, demonstrating that they also produce enhanced/separated speech with a high intelligibility. A CASA training target produced the highest STOI score (IAM+MSE), demonstrating its proficiency at producing highly intelligible enhanced/separated speech.

Comparing CASA and MS training targets, IAM+MSE produced better STOI, ESTOI, SDR, SI-SDR, SegSNR, and WER scores than any of the MS training targets. In fact, a significant difference between the SDR, SI-SDR, SegSNR, STOI, and ESTOI scores for IAM+MSE and all MS training targets exists. However, MS training targets, namely $|S|^{0.3}$, produced higher CSIG, CBAK, COVL, and PESQ scores than any of the CASA training targets. Moreover, a significant difference between the COVL and PESQ scores of $|S|^{0.3}$ and all the CASA training targets exists. This indicates that CASA training targets produce more intelligible enhanced/separated speech than MS training targets. However, it is uncertain if CASA or MS training targets produce enhanced/separated speech at a higher quality, as CASA training targets attain higher SDR, SI-SDR, and SegSNR scores, while MS training targets attain higher CSIG, CBAK, COVL, and PESQ scores. Considering that CSIG, CBAK, COVL, and PESQ, are more correlated with subjective quality scores than SegSNR (Hu and Loizou, 2008), it stands to reason that the MS training targets produce higher quality enhanced/separated speech.

Comparing MS and MMSE training targets, $\left[F(\xi_{\text{dB}});F(\gamma_{\text{dB}})\right]$+BCE obtained better scores than any of the MS training targets for each of the objective measures. The advantage that MMSE training targets have over MS training targets is emphasised when considering that a significant difference between the CBAK, SDR, SI-SDR, ESTOI scores for $\left[F(\xi_{\text{dB}});F(\gamma_{\text{dB}})\right]$+BCE and all MS training targets exists. This indicates that MMSE training targets produce enhanced/separated speech at a higher quality and intelligibility than MS training targets.

Comparing CASA and MMSE training targets, G_{CWF}+MSE produced better CSIG, CBAK, COVL, PESQ, ESTOI, SDR, SI-SDR, SegSNR, and WER scores than the IRM and the IAM. Moreover, when comparing the CBAK scores for G_{CWF}+MSE to those for the IRM and the IAM, a statistically significant difference exists, demonstrating the main advantage that MMSE training targets hold over CASA training targets—background noise suppression. In summary, the results in Table IV indicate that *a priori* SNR and joint *a priori* and *a posteriori* SNR training targets are best for background noise suppression and produce the highest quality enhanced/separated speech, while gain training targets, as well as the IAM, cause the least speech distortion and produce the most intelligible enhanced/separated speech. Moreover, CASA training targets produce more intelligible enhanced/separated speech than MS training targets, and MS training targets produce enhanced/separated speech at a higher quality than CASA training targets.

B. CASA training targets

In this subsection, we evaluate the mean objective scores of the CASA training targets presented in Table IV. Amongst the CASA training targets, the IBM produced the highest SDR, SI-SDR, and SegSNR, demonstrating that its all-or-nothing strategy succeeds at decreasing the amount of distortion between the clean and enhanced/separated speech. However, IRM+MSE and IAM+MSE produce better objective scores for all other measures. Moreover, a significant difference exists between the CSIG, CBAK, COVL, PESQ, STOI, ESTOI, and WER scores for the IBM to those for IRM+MSE and IAM+MSE, indicating that the IBM produces enhanced/separated speech at a relatively lower quality and intelligibility. Comparing the IRM and the IAM, the IAM attains better CSIG, COVL, PESQ, STOI, ESTOI, and WER scores than the IRM, indicating that

the IAM produces more intelligible enhanced/separated speech with less speech distortion than the IRM. However, the IRM attains higher CBAK, SDR, SI-SDR, and SegSNR scores than the IAM, suggesting that the IRM is superior at background noise suppression than the IAM.

For the IBM, a significant difference exists only between the CSIG scores for the MSE and BCE loss functions, suggesting that either loss function is suitable for the IBM. For the IRM, there is a significant difference between the SDR, SI-SDR, and SegSNR for the MSE and BCE loss functions. For the IAM, no significant difference exists between the objective scores for the MSE and BCE loss functions, suggesting that either loss function is suitable for the IAM. For the IAM, the mMSA loss function produced the highest SDR and SegSNR. However, the mMSA loss function was outperformed on the remaining objective measures, with a significant difference existing between the CSIG, CBAK, COVL, PESQ, ESTOI, SDR scores for the mMSA loss function and the MSE and BCE loss functions. In Luo *et al.* (2017) where the mMSA loss function was originally proposed, it attained higher SDR scores than the MSE loss function. However, no other objective measures (apart from signal-to-interference ratio (SIR) and signal-to-artifacts ratio (SAR)) were reported in Luo *et al.* (2017). This highlights the importance of using a range of objective measures for evaluation. For the mSA loss function in Zheng and Zhang (2019, Equation 8), which is the mMSA loss function with additional phase terms, the authors trained using the MSE loss function for the first portion of training and then the mSA loss function for the second portion of training. This may increase the performance of the mMSA loss function.

TABLE IV. Mean objective scores for ResNet-TCN on the test set of the DEMAND Voice Bank dataset described in Subsection V C 1. The highest score for each measure—except WER—is in boldface. The lowest WER is in boldface. Values for STOI, ESTOI, and WER are given as percentages.

Category	Target	Loss	MMSE est.	CSIG	CBAK	COVL	PESQ	STOI	ESTOI	SDR	SI-SDR	SegSNR	WER
–	Noisy speech	–	–	3.50	2.47	2.73	1.99	91.53	78.31	8.68	8.39	1.71	30.03
CASA	IBM	MSE	–	1.99	2.96	1.96	2.11	92.97	81.64	19.27	17.56	9.11	36.60
	IBM	BCE	–	2.12	2.96	2.03	2.13	92.73	81.63	18.90	17.37	9.04	36.87
	IRM	MSE	–	4.17	3.29	3.46	2.73	93.74	84.05	17.72	16.92	8.04	25.52
	IRM	BCE	–	4.16	3.25	3.45	2.72	93.87	84.15	17.05	16.42	7.55	25.57
	IAM	MSE	–	4.20	3.28	3.49	2.74	**93.94**	84.22	17.38	16.70	7.66	25.48
	IAM	BCE	–	4.22	3.29	3.50	2.75	93.76	84.11	17.25	16.56	7.67	25.86
	IAM	mMSA	–	2.23	2.72	1.97	1.77	93.52	76.36	18.04	16.23	7.79	32.66
MS	$\lvert S\rvert'$	BCE	–	4.14	3.20	3.44	2.72	93.18	82.73	16.30	15.30	6.64	26.92
	$\lvert S_{\mathrm{dB}}\rvert$	MSE	–	4.11	3.06	3.40	2.68	91.16	79.72	12.50	10.89	4.80	28.31
	$z(\lvert S_{\mathrm{dB}}\rvert)$	MSE	–	4.07	3.05	3.38	2.70	90.99	79.22	11.91	9.93	4.69	29.59
	$\lvert S_{\mathrm{dB}}\rvert'$	MSE	–	4.02	2.94	3.27	2.51	91.15	79.47	11.91	10.16	4.30	28.88
	$\lvert S_{\mathrm{dB}}\rvert'$	BCE	–	4.09	3.08	3.38	2.67	91.88	80.51	13.62	11.99	5.22	28.04
	$\lvert S\rvert^{0.3}$	MSE	–	4.25	3.29	3.57	2.87	92.96	82.74	16.37	15.21	6.79	27.25
	$F(\lvert S_{\mathrm{dB}}\rvert)$	MSE	–	3.71	2.69	2.91	2.13	89.46	76.82	9.58	6.33	3.38	32.75
	$F(\lvert S_{\mathrm{dB}}\rvert)$	BCE	–	3.91	2.92	3.18	2.45	90.19	78.12	11.26	8.79	4.45	30.77
MMSE	ξ'	MSE	MMSE-LSA	2.34	1.60	1.77	1.57	75.28	49.88	8.20	-4.21	-1.81	58.85
	ξ'	MSE	SRWF	2.40	1.63	1.81	1.56	75.81	50.95	8.10	-3.81	-1.83	57.91
	ξ'	BCE	MMSE-LSA	3.50	2.48	2.73	2.02	91.81	78.62	8.87	8.78	1.99	29.32
	ξ'	BCE	SRWF	3.49	2.47	2.73	2.01	91.76	78.51	8.73	8.63	1.87	29.38
	ξ_{dB}	MSE	MMSE-LSA	4.19	3.40	3.52	2.83	93.31	83.97	18.89	17.72	9.03	25.78
	ξ_{dB}	MSE	SRWF	4.18	3.32	3.48	2.76	93.36	83.92	17.93	17.11	8.38	26.16
	$z(\xi_{\mathrm{dB}})$	MSE	MMSE-LSA	4.20	3.36	3.52	2.81	93.64	84.07	18.14	17.23	8.54	25.74
	$z(\xi_{\mathrm{dB}})$	MSE	SRWF	4.16	3.25	3.45	2.71	93.66	83.93	17.01	16.41	7.68	26.14
	ξ'_{dB}	MSE	MMSE-LSA	4.21	3.36	3.54	2.83	93.37	83.83	18.07	17.20	8.40	26.75
	ξ'_{dB}	MSE	SRWF	4.18	3.25	3.47	2.73	93.41	83.77	16.87	16.31	7.47	26.87
	ξ'_{dB}	BCE	MMSE-LSA	4.14	3.32	3.46	2.76	93.17	83.43	17.83	16.98	8.31	26.52
	ξ'_{dB}	BCE	SRWF	4.06	3.26	3.34	2.61	93.34	83.56	18.27	17.27	8.55	26.89
	$F(\xi_{\mathrm{dB}})$	MSE	MMSE-LSA	4.21	3.40	3.55	2.86	93.53	84.06	18.67	17.55	8.84	25.83
	$F(\xi_{\mathrm{dB}})$	MSE	SRWF	4.18	3.31	3.49	2.77	93.60	84.08	17.64	16.87	8.12	26.00
	$F(\xi_{\mathrm{dB}})$	BCE	MMSE-LSA	4.24	**3.42**	3.57	2.87	93.61	84.22	18.99	17.80	9.04	25.97
	$F(\xi_{\mathrm{dB}})$	BCE	SRWF	4.21	3.34	3.51	2.79	93.66	84.18	18.01	17.19	8.37	25.99
	$[\xi';\gamma']$	BCE	MMSE-LSA	3.51	2.49	2.74	2.01	91.72	78.64	8.86	8.76	1.96	29.71
	$[\xi_{\mathrm{dB}};\gamma_{\mathrm{dB}}]$	MSE	MMSE-LSA	4.19	**3.42**	3.52	2.83	93.64	84.12	19.21	**17.89**	**9.22**	26.01
	$[\xi'_{\mathrm{dB}};\gamma'_{\mathrm{dB}}]$	MSE	MMSE-LSA	4.18	3.37	3.48	2.76	93.41	83.62	**19.38**	17.86	9.14	27.30
	$[\xi'_{\mathrm{dB}};\gamma'_{\mathrm{dB}}]$	BCE	MMSE-LSA	4.20	3.39	3.53	2.82	93.24	83.49	18.56	17.43	8.84	26.53
	$[F(\xi_{\mathrm{dB}});F(\gamma_{\mathrm{dB}})]$	MSE	MMSE-LSA	4.22	3.38	3.55	2.85	93.65	84.07	18.18	17.26	8.47	25.99
	$[F(\xi_{\mathrm{dB}});F(\gamma_{\mathrm{dB}})]$	BCE	MMSE-LSA	4.26	3.41	**3.59**	**2.88**	93.50	83.92	18.52	17.43	8.75	26.57
	G_{WF}	MSE	–	4.19	3.29	3.49	2.76	93.92	84.35	18.03	16.59	7.74	**25.33**
	G_{WF}	BCE	–	4.21	3.31	3.51	2.77	93.66	84.02	17.80	16.72	7.93	25.61
	G_{CWF}	MSE	–	4.23	3.35	3.54	2.81	93.76	84.33	17.28	17.14	8.26	25.36
	G_{CWF}	BCE	–	**4.27**	3.37	3.58	2.85	93.80	84.42	17.48	16.97	8.19	25.81
	$G_{\mathrm{MMSE-STSA}}$	MSE	–	**4.27**	3.37	3.58	2.86	93.69	84.41	17.93	17.07	8.22	25.54
	$G_{\mathrm{MMSE-STSA}}$	BCE	–	4.21	3.34	3.51	2.78	93.72	84.17	18.15	17.23	8.32	25.50
	$G_{\mathrm{MMSE-LSA}}$	MSE	–	4.25	3.34	3.55	2.81	93.82	84.29	17.82	16.99	8.06	26.13
	$G_{\mathrm{MMSE-LSA}}$	BCE	–	4.21	3.35	3.52	2.79	93.90	**84.46**	18.25	17.33	8.44	25.47

C. MS training targets

Here, we evaluate the mean objective scores of the MS training targets found in Table IV. For the MS training targets, multiple compression functions were inves-

tigated. Min-max normalisation and power compression of the clean speech MS was found to be best, with $|S|'$ producing the best objective scores for STOI, SI-SDR, and WER, and $|S|^{0.3}$ producing the best objective scores for CSIG, CBAK, COVL, PESQ, ESTOI, SDR, and SegSNR. This suggests that applying a compression function to the exponentially distributed magnitude or power values is better than to the normally distributed decibel values of the clean speech MS. We speculate that this because decibel values above 0 dB are over-compressed. A portion of the values below 0 dB are a result of regions of silence, whereas values above 0 dB correspond to regions of speech. An example of the over-compression of values above 0 dB is shown in Figure 1 (b); the CDF compresses all values below 0 dB into the interval $[0, 0.967]$, whereas values above 0 dB are compressed into the interval $(0.967, 1]$. The upper bounds of the interval $[0, 0.967]$ also indicates the proportion of values that are below 0 dB for the sample described in Subsection V D (i.e. 96.7% of the decibel values for the clean speech MS are below 0 dB). This likely causes a model to poorly estimate the formants of speech. For $|S_{\mathrm{dB}}|'$, a significant difference was found between the objectives scores of each loss function (for all measures except WER), with BCE performing best. This was also the case for $F(|S_{\mathrm{dB}}|)$. This indicates that the BCE loss function is best for MS training targets with compression applied to their decibel values. As the MSE loss function assumes that the variable to be estimated is distributed normally, less importance is given to observed values that are further away from the mean. This is detrimental to the values of the clean speech MS above 0 dB, as after compression they would be located far away from the mean of $|S_{\mathrm{dB}}|'$ and $F(|S_{\mathrm{dB}}|)$.

D. MMSE training targets

The mean objective scores attained by the MMSE training targets found in Table IV are evaluated in this subsection. Amongst all three MMSE training target sub-classes (*a priori* SNR, joint *a priori* and *a posteriori* SNR, and gain training targets), the results indicate that the joint *a priori* and *a posteriori* SNR training target produces enhanced/separated speech at the highest quality (highest CBAK, COVL, PESQ, SDR, SI-SDR, and SegSNR scores), and that the gain training targets produce the most intelligible enhanced/separated speech (best CSIG, STOI, ESTOI, and WER scores). The *a priori* SNR training targets performed similarly to the joint *a priori* and *a posteriori* SNR training targets, with a significant difference existing only between the SDR and SI-SDR values of $F(\xi_{\mathrm{dB}})$+MMSE-LSA and $\left[F(\xi_{\mathrm{dB}}); F(\gamma_{\mathrm{dB}})\right]$+MMSE-LSA. Moreover, it is unclear if an improvement in the performance of the MMSE-LSA estimator is achieved when replacing the ML estimate of the *a posteriori* SNR with that estimated using a joint *a priori* and *a posteriori* SNR training target. This highlights how little of an impact the *a posteriori* SNR has on the MMSE-LSA estimator, as described in Cappe (1994).

The best performing training target for *a priori* SNR training targets was $F(\xi_{\mathrm{dB}})$, producing the best CSIG, CBAK, COVL, PESQ, STOI, ESTOI, SDR, SI-SDR, and SegSNR scores ($z(\xi_{\mathrm{dB}})$ produced the lowest WER and equaled the highest STOI score). This indicates that the CDF as the compression function is an apt choice for the decibel values of the instantaneous *a priori* SNR. This is the opposite finding to that found for the decibel values of the clean speech MS. Like the decibel values of the clean speech MS, the decibel values of the instantaneous *a priori* SNR are distributed normally. However, poor estimation of values from the tails of the distribution do not impact performance as significantly, as they correspond to very small and large power values of the instantaneous *a priori* SNR. The best performing joint *a priori* and *a posteriori* SNR training targets were $\left[F(\xi_{\mathrm{dB}}); F(\gamma_{\mathrm{dB}})\right]$, producing the best CSIG, COVL, PESQ, STOI, and WER scores, and $\left[\xi_{\mathrm{dB}}; \gamma_{\mathrm{dB}}\right]$, producing the highest CBAK, ESTOI, SDR, SI-SDR, and SegSNR scores. Amongst the gain training targets, G_{WF} and $G_{\mathrm{MMSE-LSA}}$ produced the most intelligible enhanced/separated speech (best STOI, ESTOI, and WER scores), G_{CWF}, $G_{\mathrm{MMSE-STSA}}$ and $G_{\mathrm{MMSE-LSA}}$ were best at background noise suppression (best CBAK, SDR, SI-SDR, and SegSNR scores), and G_{CWF} and $G_{\mathrm{MMSE-STSA}}$ produced the highest quality enhanced/separated speech (CSIG, COVL, and PESQ).

For ξ', it can be seen that the BCE loss function significantly outperforms the MSE loss function. This is the only *a priori* SNR training target where a compression function is applied to the power values and not the decibel values. The power values of the instantaneous *a priori* SNR are distributed exponentially, even after min-max normalisation. This makes the MSE loss function sub-optimal, as it assumes a normal distribution. This also gives reason as to why the loss for $\left[\xi'; \gamma'\right]$+MSE would not converge during train. The MSE loss function was best for ξ'_{dB}, where a significant difference between the CSIG, COVL, PESQ, SDR, SI-SDR, SegSNR, and WER scores of the MSE and BCE loss functions exists.

For $F(\xi_{\mathrm{dB}})$, it is unclear which loss function is best, as a significant difference existed only between the SDR of the MSE and BCE loss functions. For the joint *a priori* and *a posteriori* SNR training targets, it is unclear if the MSE or BCE loss function is best, as a significant difference exists only between the SDR and SI-SDR scores of the MSE and BCE loss functions for $\left[\xi'_{\mathrm{dB}}; \gamma'_{\mathrm{dB}}\right]$ (there was no significant difference between the objective scores of the MSE and BCE loss functions for $\left[F(\xi_{\mathrm{dB}}); F(\gamma_{\mathrm{dB}})\right]$). This finding was also the case for the gain training targets, as a significant difference exists only between the COVL and PESQ scores of the MSE and BCE loss functions for $G_{\mathrm{MMSE-STSA}}$ and the SDR of the MSE and BCE loss functions for $G_{\mathrm{MMSE-LSA}}$.

E. A priori SNR and joint a priori and a posteriori SNR training targets vs. gain training targets

When comparing the mean objective scores presented in Table IV obtained by the best performing *a priori* SNR and joint *a priori* and *a posteriori* SNR training targets to that of the gain training targets, it is clear that the former produce enhanced/separated speech at a higher quality, while the latter at a higher intelligibility. For example, $F(\xi_{\mathrm{dB}})$+SRWF+BCE produced higher CSIG, CBAK, COVL, PESQ, ESTOI, SDR, SI-SDR, and SegSNR scores than IRM+BCE (i.e. G_{SRWF}+BCE), while IRM+BCE produced better STOI and WER scores than $F(\xi_{\mathrm{dB}})$+SRWF+BCE, where a statistically significant difference exists between the CBAK, COVL, PESQ, STOI, SDR, SI-SDR, and SegSNR scores. Moreover, $\left[F(\xi_{\mathrm{dB}}); F(\gamma_{\mathrm{dB}})\right]$+MMSE-LSA+BCE produced higher CSIG, CBAK, COVL, PESQ, SDR, SI-SDR, and SegSNR scores than $G_{\mathrm{MMSE-LSA}}$, while $G_{\mathrm{MMSE-LSA}}$ produced better STOI, ESTOI, and WER scores than $\left[F(\xi_{\mathrm{dB}}); F(\gamma_{\mathrm{dB}})\right]$+MMSE-LSA+BC, where a statistically significant difference exists between the CBAK, PESQ, and SegSNR scores.

To help understand this phenomenon, we compare the distribution of the IRM (Figure 1 (g)) to that of $F(\xi_{\mathrm{dB}})$ (Figure 1 (h)). It can be seen that $F(\xi_{\mathrm{dB}})$ is distributed uniformly between 0 and 1, meaning that a model would equally observe all values during training. However, the IRM has a truncated bimodal distribution with peaks at 0 and 1, causing a model to more frequently observe values from these peaks. The values from the peak located at 1 correspond to the formants of the clean speech. This indicates that gain training targets bias a model to more accurately estimate the formants of the clean speech, leading to less speech distortion and more intelligible enhanced/separated speech (Bhat *et al.*, 2017).

F. Objective scores on alternative DNN architectures

The mean objective scores in Table IV are produced using ResNet-TCN. To ensure that the previous findings are upheld on different DNN architectures, objective scores for each training target are found using an attention-based network and an RNN, namely MHANet and BiLSTM-Chimera++. ResNet-TCN and MHANet are causal models, whilst BiLSTM-Chimera++ is a non-causal model. More details about each model, including hyperparameters, are given in Appendix A 2. The objective scores for MHANet and BiLSTM-Chimera++ on the DEMAND Voice Bank dataset are given in Tables V and VI, respectively.

For MHANet, the joint *a priori* and *a posteriori* SNR training targets produced the highest CBAK, COVL, PESQ, SI-SDR, and SegSNR scores. Morevover, the joint *a priori* and *a posteriori* SNR training targets produced the highest CSIG, CBAK, COVL, PESQ, ESTOI, SDR, SI-SDR, and SegSNR scores for BiLSTM-Chimera++. This supports the finding that joint *a priori* and *a posteriori* SNR training targets produce the highest quality enhanced/separated speech amongst the training targets. For MHANet, the gain training targets produced the best ESTOI and WER scores. Morevover, the gain training targets produced the best STOI and WER scores for BiLSTM-Chimera++. This supports the finding that gain training targets produce the most intelligible enhanced/separated speech amongst the training targets—with the IAM the next best (IAM produced the highest STOI score for MHANet).

One notable inconsistency for the IAM is the difference between the objective scores for the mMSA loss function and the MSE and BCE loss functions—the difference was significantly smaller for MHANet and BiLSTM-Chimera++ than for ResNet-TCN (for CSIG, CBAK, COVL, PESQ, and ESTOI). Another notable difference is that $|S|^{0.3}$+BiLSTM-Chimera++ equalled the highest CSIG and PESQ scores. Clean speech MS training targets, as well as IAM+mMSA, appear more difficult to learn, as shown by their objective scores for ResNet-TCN. Moreover, MHANet and BiLSTM-Chimera++ are more efficient at learning each of the training targets than ResNet-TCN, as shown by the overall improvement in the objective scores from Table IV to Tables V and VI. Considering this, the learning efficiency of MHANet and BiLSTM-Chimera++ likely benefited IAM+mMSA and $|S|^{0.3}$ most of all, as it would be harder to increase the objective scores of the training targets that demonstrated a high speech enhancement/separation performance on ResNet-TCN.

G. Deep Xi dataset objective scores

In this subsection, we evaluate the mean objective scores of the training targets on a second dataset, namely the Deep Xi dataset (Table VII). The analysis in this subsection will be used to either support or refute the findings made in previous subsections on the DEMAND Voice Bank dataset. Due to their lack of performance on the DEMAND Voice Bank dataset, we exclude ξ' and $\left[\xi'; \gamma'\right]$ from this subsection. *A priori* SNR and joint *a priori* and *a posteriori* SNR training targets attained the highest CBAK, COVL, and PESQ scores, reinforcing that they produce enhanced/separated speech at the highest quality and are best at background noise suppression. Gain training targets, namely $G_{\mathrm{MMSE-STSA}}$, attained the highest CSIG, STOI, ESTOI, SDR, and SI-SDR scores, and IAM+MSE produced the best WER, supporting the claim that the IAM and gain training targets cause the least speech distortion and produce the most intelligible enhanced/separated speech. For the IAM, the difference between the objective scores for the mMSA loss function and the MSE and BCE loss functions was larger for the Deep Xi dataset than for the DEMAND Voice Bank dataset. It was expected that the larger training set of the Deep Xi dataset would enable

TABLE V. Mean objective scores for MHANet on the test set of the DEMAND Voice Bank dataset described in Subsection V C 1. The highest score for each measure—except WER—is in boldface. The lowest WER is in boldface. Values for STOI, ESTOI, and WER are given as percentages.

Category	Target	Loss	MMSE est.	CSIG	CBAK	COVL	PESQ	STOI	ESTOI	SDR	SI-SDR	SegSNR	WER
–	Noisy speech	–	–	3.50	2.47	2.73	1.99	91.53	78.31	8.68	8.39	1.71	30.03
CASA	IBM	MSE	–	1.87	3.00	1.90	2.17	93.41	82.22	19.60	17.92	9.38	24.56
	IBM	BCE	–	1.92	3.00	1.93	2.17	93.56	82.21	**19.72**	17.84	9.33	29.70
	IRM	MSE	–	4.29	3.45	3.62	2.89	94.26	85.24	19.04	17.90	9.11	24.86
	IRM	BCE	–	4.35	3.46	3.67	2.94	94.34	85.32	18.75	17.72	8.93	24.20
	IAM	MSE	–	**4.36**	3.41	3.66	2.90	**94.35**	85.34	17.90	17.11	8.26	24.56
	IAM	BCE	–	**4.36**	3.41	3.67	2.93	94.24	85.24	17.73	17.00	8.10	23.99
	IAM	mMSA	–	4.05	3.35	3.42	2.78	93.55	83.71	18.80	17.80	8.84	26.07
MS	$\lvert S\rvert'$	BCE	–	4.22	3.17	3.52	2.80	92.13	82.67	14.57	13.40	5.30	26.28
	$\lvert S_{\mathrm{dB}}\rvert$	MSE	–	4.09	3.03	3.38	2.67	89.49	78.49	11.45	9.78	4.49	28.32
	$z(\lvert S_{\mathrm{dB}}\rvert)$	MSE	–	4.14	3.05	3.44	2.75	89.43	78.64	11.23	9.46	4.19	28.38
	$\lvert S_{\mathrm{dB}}\rvert'$	MSE	–	4.10	3.05	3.40	2.69	89.72	79.07	11.81	10.14	4.56	28.28
	$\lvert S_{\mathrm{dB}}\rvert'$	BCE	–	4.14	3.10	3.44	2.74	90.02	79.62	12.77	11.24	4.93	27.77
	$\lvert S\rvert^{0.3}$	MSE	–	4.29	3.27	3.63	2.95	92.35	83.37	12.27	14.93	5.74	26.30
	$F(\lvert S_{\mathrm{dB}}\rvert)$	MSE	–	3.87	2.81	3.11	2.35	88.12	75.93	9.34	6.63	3.63	30.20
	$F(\lvert S_{\mathrm{dB}}\rvert)$	BCE	–	4.03	2.98	3.32	2.60	89.07	77.87	10.71	8.65	4.21	28.80
MMSE	ξ'	MSE	MMSE-LSA	3.50	2.47	2.73	1.99	91.53	78.31	8.45	8.48	1.74	29.94
	ξ'	MSE	SRWF	3.50	2.47	2.73	1.99	91.53	78.31	8.43	8.46	1.73	29.99
	ξ'	BCE	MMSE-LSA	3.50	2.49	2.73	2.00	91.66	78.66	9.03	9.10	2.06	29.29
	ξ'	BCE	SRWF	3.50	2.48	2.73	2.00	91.62	78.53	8.76	8.84	1.90	29.57
	ξ_{dB}	MSE	MMSE-LSA	4.30	3.50	3.66	2.97	93.82	84.78	18.07	19.14	9.33	25.67
	ξ_{dB}	MSE	SRWF	4.28	3.41	3.60	2.89	93.87	84.77	17.42	18.15	8.64	25.49
	$z(\xi_{\mathrm{dB}})$	MSE	MMSE-LSA	4.29	3.49	3.65	2.96	93.76	84.75	18.01	19.12	9.28	25.67
	$z(\xi_{\mathrm{dB}})$	MSE	SRWF	4.28	3.41	3.60	2.88	93.80	84.72	17.35	18.14	8.61	25.67
	ξ'_{dB}	MSE	MMSE-LSA	4.31	3.51	3.67	2.98	93.81	84.67	18.20	19.38	9.37	24.29
	ξ'_{dB}	MSE	SRWF	4.30	3.43	3.62	2.90	93.86	84.66	17.57	18.41	8.72	24.66
	ξ'_{dB}	BCE	MMSE-LSA	4.33	3.51	3.67	2.97	93.91	84.95	18.31	19.54	9.51	24.90
	ξ'_{dB}	BCE	SRWF	4.31	3.44	3.62	2.89	93.96	84.91	17.73	18.61	8.90	24.79
	$F(\xi_{\mathrm{dB}})$	MSE	MMSE-LSA	4.33	3.50	3.68	2.98	93.99	84.96	18.02	19.08	9.24	24.86
	$F(\xi_{\mathrm{dB}})$	MSE	SRWF	4.30	3.41	3.62	2.89	94.04	84.94	17.33	18.05	8.53	24.99
	$F(\xi_{\mathrm{dB}})$	BCE	MMSE-LSA	4.31	3.51	3.66	2.97	93.94	84.83	18.25	19.50	9.45	24.51
	$F(\xi_{\mathrm{dB}})$	BCE	SRWF	4.29	3.43	3.61	2.88	94.00	84.83	17.69	18.56	8.85	24.64
	$[\xi';\gamma']$	BCE	MMSE-LSA	3.52	2.49	2.75	2.02	91.69	78.65	8.91	8.99	2.00	29.31
	$[\xi_{\mathrm{dB}};\gamma_{\mathrm{dB}}]$	MSE	MMSE-LSA	4.31	3.50	3.66	2.96	93.97	84.90	18.20	19.39	9.37	24.74
	$[\xi'_{\mathrm{dB}};\gamma'_{\mathrm{dB}}]$	MSE	MMSE-LSA	4.31	3.51	3.66	2.96	93.85	84.76	18.33	19.61	9.53	25.18
	$[\xi'_{\mathrm{dB}};\gamma'_{\mathrm{dB}}]$	BCE	MMSE-LSA	4.32	**3.52**	3.67	2.97	93.92	84.78	19.70	**18.29**	**9.59**	25.31
	$[F(\xi_{\mathrm{dB}});F(\gamma_{\mathrm{dB}})]$	MSE	MMSE-LSA	4.34	**3.52**	**3.70**	**3.00**	94.04	85.00	19.54	18.22	9.43	25.02
	$[F(\xi_{\mathrm{dB}});F(\gamma_{\mathrm{dB}})]$	BCE	MMSE-LSA	4.35	**3.52**	**3.70**	**3.00**	93.98	84.92	19.29	18.07	9.30	24.67
	G_{WF}	MSE	–	4.31	3.44	3.64	2.91	94.13	85.22	18.82	17.45	8.71	24.39
	G_{WF}	BCE	–	4.32	3.45	3.64	2.92	94.17	85.17	18.81	17.55	8.85	24.30
	G_{CWF}	MSE	–	4.34	3.47	3.67	2.95	94.34	**85.36**	18.36	17.77	9.00	24.82
	G_{CWF}	BCE	–	4.35	3.47	3.68	2.95	94.28	85.27	18.49	17.78	8.99	**23.93**
	$G_{\mathrm{MMSE-STSA}}$	MSE	–	4.33	3.46	3.65	2.92	94.31	85.27	18.87	17.80	9.04	24.53
	$G_{\mathrm{MMSE-STSA}}$	BCE	–	4.34	3.48	3.66	2.94	94.20	85.24	19.18	18.00	9.20	24.33
	$G_{\mathrm{MMSE-LSA}}$	MSE	–	4.31	3.43	3.62	2.89	94.24	85.17	18.57	17.58	8.79	24.52
	$G_{\mathrm{MMSE-LSA}}$	BCE	–	4.32	3.46	3.64	2.92	94.26	85.13	18.82	17.72	9.00	24.47

ResNet-TCN to better learn IAM+mMSA, however, this was not the case. As for the DEMAND Voice Bank dataset, the CDF was the best compression function for the *a priori* SNR and joint *a priori* and *a posteriori* SNR training targets on the Deep Xi dataset.

H. Objective scores on individual conditions

Here, we evaluate the mean objective scores of the training targets on the individual conditions of the Deep Xi dataset. The conditions include multiple noise sources and SNR levels. As the mean objective score for each condition is computed from a low number of samples (10), we avoid difference testing in this subsection. Only the best performing CASA, MS, and MMSE training targets are considered. To keep the following evaluation succinct, we present only five of the aformentioned objective measures, namely, CSIG, CBAK, COVL, ESTOI, and WER. Moreover, only the MMSE-LSA estimator is used with the *a priori* and *a posteriori* SNR training targets. Finally, only the MSE loss function is evaluated (except with $|S|'$, as it was only trained with the BCE loss function).

The mean CSIG scores are given in Table VIII. The highest CSIG scores were attained by $|S|'$ and $|S|^{0.3}$ at lower SNR levels, and by MMSE training targets at higher SNR levels. This indicates that $|S|'$ and $|S|^{0.3}$, and MMSE training targets do not heavily distort the speech at lower and higher SNR levels, respectively. From the objective scores in Table VIII, it is unclear if the noise source has a significant impact on the best performing training target.

TABLE VI. Mean objective scores for BiLSTM-Chimera++ on the test set of the DEMAND Voice Bank dataset described in Subsection V C 1. The highest score for each measure—except WER—is in boldface. The lowest WER is in boldface. Values for STOI, ESTOI, and WER are given as percentages.

Category	Target	Loss	MMSE est.	CSIG	CBAK	COVL	PESQ	STOI	ESTOI	SDR	SI-SDR	SegSNR	WER
–	Noisy speech	–	–	3.50	2.47	2.73	1.99	91.53	78.31	8.68	8.39	1.71	30.03
CASA	IBM	MSE	–	1.89	3.02	1.94	2.23	94.22	82.70	19.00	17.52	9.10	25.54
	IBM	BCE	–	1.79	3.03	1.87	2.23	94.05	82.60	19.68	17.87	9.36	31.39
	IRM	MSE	–	4.25	3.40	3.58	2.89	94.21	85.17	18.67	17.70	8.85	23.84
	IRM	BCE	–	4.28	3.43	3.61	2.92	94.07	85.10	18.96	17.87	8.99	23.75
	IAM	MSE	–	4.21	3.30	3.52	2.81	93.90	84.66	17.44	16.79	7.86	24.05
	IAM	BCE	–	4.22	3.32	3.52	2.80	93.84	84.46	17.83	17.09	8.15	24.34
	IAM	mMSA	–	4.02	3.31	3.37	2.71	93.53	83.76	18.94	17.93	8.94	26.28
MS	$\lvert S\rvert'$	BCE	–	4.27	3.34	3.62	2.94	93.45	83.57	16.39	15.24	7.00	25.91
	$\lvert S_{\mathrm{dB}}\rvert$	MSE	–	3.90	2.93	3.19	2.49	89.72	76.42	10.76	8.96	4.58	32.46
	$z(\lvert S_{\mathrm{dB}}\rvert)$	MSE	–	3.96	3.01	3.27	2.58	89.95	77.32	11.57	9.85	4.90	30.17
	$\lvert S_{\mathrm{dB}}\rvert'$	MSE	–	4.01	3.08	3.33	2.66	91.04	79.09	12.73	10.89	5.45	29.48
	$\lvert S_{\mathrm{dB}}\rvert'$	BCE	–	4.06	3.12	3.39	2.72	91.02	79.42	13.17	11.34	5.61	28.57
	$\lvert S\rvert^{0.3}$	MSE	–	**4.34**	3.40	3.70	**3.05**	93.24	83.82	16.45	14.97	7.22	25.30
	$F(\lvert S_{\mathrm{dB}}\rvert)$	MSE	–	3.66	2.71	2.89	2.13	88.41	74.78	8.73	5.70	3.82	33.33
	$F(\lvert S_{\mathrm{dB}}\rvert)$	BCE	–	3.83	2.87	3.10	2.38	89.21	76.05	10.65	8.24	4.40	30.95
MMSE	ξ'	MSE	MMSE-LSA	3.50	2.47	2.73	1.99	91.53	78.31	8.43	8.42	1.73	30.02
	ξ'	MSE	SRWF	3.50	2.47	2.73	1.99	91.53	78.31	8.40	8.42	1.72	30.02
	ξ'	BCE	MMSE-LSA	3.53	2.49	2.75	2.02	91.72	78.65	8.73	8.63	1.88	29.37
	ξ'	BCE	SRWF	3.52	2.48	2.74	2.01	91.64	78.50	8.62	8.53	1.80	29.69
	ξ_{dB}	MSE	MMSE-LSA	4.21	3.37	3.57	2.91	94.08	85.03	17.84	17.06	8.35	25.01
	ξ_{dB}	MSE	SRWF	4.17	3.25	3.49	2.79	94.08	84.89	16.59	16.10	7.37	25.08
	$z(\xi_{\mathrm{dB}})$	MSE	MMSE-LSA	4.23	3.47	3.59	2.93	93.75	84.74	19.57	18.26	9.51	24.72
	$z(\xi_{\mathrm{dB}})$	MSE	SRWF	4.20	3.38	3.52	2.83	93.75	84.60	18.62	17.68	8.88	24.58
	ξ'_{dB}	MSE	MMSE-LSA	4.33	3.51	3.69	3.01	94.16	85.45	19.48	18.23	9.46	24.67
	ξ'_{dB}	MSE	SRWF	4.30	3.42	3.62	2.91	94.15	85.31	18.48	17.58	8.75	24.79
	ξ'_{dB}	BCE	MMSE-LSA	4.31	3.49	3.67	2.99	93.99	85.29	19.32	18.13	9.37	24.07
	ξ'_{dB}	BCE	SRWF	4.28	3.40	3.60	2.89	94.00	85.17	18.31	17.47	8.65	24.08
	$F(\xi_{\mathrm{dB}})$	MSE	MMSE-LSA	4.27	3.49	3.64	2.98	93.87	84.96	19.61	18.28	9.45	24.33
	$F(\xi_{\mathrm{dB}})$	MSE	SRWF	4.24	3.39	3.56	2.87	93.89	84.85	18.61	17.67	8.78	24.24
	$F(\xi_{\mathrm{dB}})$	BCE	MMSE-LSA	4.23	3.46	3.60	2.95	93.75	84.73	19.35	18.12	9.30	24.80
	$F(\xi_{\mathrm{dB}})$	BCE	SRWF	4.20	3.36	3.53	2.84	93.76	84.59	18.28	17.44	8.55	24.75
	$[\xi'; \gamma']$	BCE	MMSE-LSA	3.52	2.48	2.75	2.01	91.75	78.72	8.67	8.57	1.85	29.29
	$[\xi_{\mathrm{dB}}; \gamma_{\mathrm{dB}}]$	MSE	MMSE-LSA	4.25	3.41	3.60	2.94	93.97	85.08	18.35	17.43	8.67	24.87
	$[\xi'_{\mathrm{dB}}; \gamma'_{\mathrm{dB}}]$	MSE	MMSE-LSA	4.32	3.53	3.70	3.03	94.22	**85.61**	19.70	18.36	9.57	23.90
	$[\xi'_{\mathrm{dB}}; \gamma'_{\mathrm{dB}}]$	BCE	MMSE-LSA	**4.34**	**3.54**	**3.72**	**3.05**	94.23	85.49	**19.76**	**18.37**	**9.59**	24.65
	$[F(\xi_{\mathrm{dB}}); F(\gamma_{\mathrm{dB}})]$	MSE	MMSE-LSA	4.32	3.51	3.69	3.03	93.99	85.29	19.54	18.25	9.43	23.95
	$[F(\xi_{\mathrm{dB}}); F(\gamma_{\mathrm{dB}})]$	BCE	MMSE-LSA	4.26	3.49	3.63	2.97	93.91	85.11	19.47	18.23	9.41	24.14
	G_{WF}	MSE	–	4.26	3.41	3.60	2.91	94.11	85.14	18.43	17.71	8.86	24.13
	G_{WF}	BCE	–	4.24	3.41	3.58	2.90	93.87	84.74	18.88	17.69	8.84	24.01
	G_{CWF}	MSE	–	4.26	3.40	3.59	2.91	94.16	85.23	18.75	17.53	8.68	23.88
	G_{CWF}	BCE	–	4.24	3.40	3.56	2.87	94.13	85.00	18.72	17.82	8.93	24.22
	$G_{\mathrm{MMSE-STSA}}$	MSE	–	4.28	3.44	3.62	2.94	**94.24**	85.27	19.01	17.87	9.01	**23.65**
	$G_{\mathrm{MMSE-STSA}}$	BCE	–	4.22	3.37	3.54	2.84	94.16	85.02	18.44	17.51	8.62	24.07
	$G_{\mathrm{MMSE-LSA}}$	MSE	–	4.27	3.43	3.61	2.93	94.09	85.11	18.89	17.84	9.02	23.71
	$G_{\mathrm{MMSE-LSA}}$	BCE	–	4.23	3.39	3.56	2.87	93.94	84.89	18.52	17.61	8.73	24.33

This will need investigating in future work—a larger sample size for each condition, as well as the evaluation of each training target over multiple training runs, is recommended.

The mean CBAK scores are given in Table IX. The highest CBAK scores were attained by $F(\xi_{\mathrm{dB}})$ and $\left[F(\xi_{\mathrm{dB}}); F(\gamma_{\mathrm{dB}})\right]$, for most conditions. This again demonstrates their proficiency at background noise suppression. Once more, $|S|^{0.3}$ performed well at low SNR levels—attaining the highest CBAK scores for *voice babble*, *street music*, and *F16* at lower SNR levels. The mean COVL scores are given in Table X, where the highest COVL scores were attained by $|S|^{0.3}$ at lower SNR levels and by MMSE training targets at higher SNR levels. The mean CSIG, CBAK, and COVL scores from Tables VIII, IX, and X indicate that MS training targets produce the highest quality enhanced/separated speech at lower SNR levels, with the same being true for MMSE training targets at high SNR levels.

The mean STOI scores are given in Table XI; the highest STOI scores were attained by $G_{\mathrm{MMSE-STSA}}$ for most conditions, by IAM for some conditions, and by $|S|'$ at lower SNR levels. Thus, MS training targets also produce highly intelligible enhanced/separated speech at lower SNR levels. At lower SNR levels, it appears easier to learn the mapping from the noisy speech MS to the clean speech MS, rather than to a CASA or MMSE training target. One fact that could lead to answering this phenomenon is that, unlike CASA and MMSE training targets, the distribution of the MS training target does not change with the SNR level. The scores for WER are given in Table XII. It can be seen that there is no consistency between which training target performs best from condition to condition. Additionally, the STOI scores in Table XI are not indicative of the WER for each condition.

TABLE VII. Mean objective scores for ResNet-TCN on the test set of the Deep Xi dataset described in Subsection V C 2. The highest score for each measure—except WER—is in boldface. The lowest WER is in boldface. Values for STOI, ESTOI, and WER are given as percentages.

Category	Target	Loss	MMSE est.	CSIG	CBAK	COVL	PESQ	STOI	ESTOI	SDR	SI-SDR	SegSNR	WER
–	Noisy speech	–	–	2.26	1.80	1.67	1.24	77.75	56.12	–	5.00	-0.25	58.88
CASA	IBM	MSE	–	1.46	2.19	1.34	1.34	80.58	64.17	10.27	9.65	5.37	56.87
	IBM	BCE	–	1.42	2.19	1.32	1.34	81.04	64.14	10.53	9.91	**5.51**	58.71
	IRM	MSE	–	3.08	2.43	2.36	1.73	85.68	70.19	10.47	10.09	4.16	41.58
	IRM	BCE	–	3.11	2.43	2.37	1.74	85.52	70.03	10.48	10.03	4.14	41.97
	IAM	MSE	–	3.10	2.46	2.39	1.76	85.70	70.56	10.72	10.18	4.34	**41.17**
	IAM	BCE	–	3.11	2.44	2.38	1.74	85.50	69.97	10.48	9.97	4.16	42.44
	IAM	mMSA	–	1.29	1.95	1.17	1.15	68.27	48.37	7.16	5.44	3.74	82.88
MS	$\lvert S\rvert'$	BCE	–	3.14	2.43	2.41	1.79	85.78	70.60	9.84	9.13	3.66	43.10
	$\lvert S_{\mathrm{dB}}\rvert$	MSE	–	3.07	2.36	2.35	1.72	82.38	66.56	7.18	6.00	2.95	48.84
	$z(\lvert S_{\mathrm{dB}}\rvert)$	MSE	–	2.83	2.18	2.14	1.57	79.19	61.02	5.42	3.94	1.95	55.89
	$\lvert S_{\mathrm{dB}}\rvert'$	MSE	–	2.99	2.30	2.26	1.64	81.44	65.14	6.67	5.56	2.76	51.22
	$\lvert S_{\mathrm{dB}}\rvert'$	BCE	–	2.99	2.32	2.27	1.65	81.63	65.14	7.10	5.99	3.02	50.43
	$\lvert S\rvert^{0.3}$	MSE	–	3.14	2.49	2.44	1.84	85.07	69.92	9.81	8.90	3.93	43.50
	$F(\lvert S_{\mathrm{dB}}\rvert)$	MSE	–	2.85	2.15	2.11	1.47	80.58	63.53	5.09	3.29	1.72	50.02
	$F(\lvert S_{\mathrm{dB}}\rvert)$	BCE	–	2.95	2.24	2.23	1.60	81.18	64.45	6.01	4.56	2.12	50.61
MMSE	ξ_{dB}	MSE	MMSE-LSA	3.07	2.50	2.38	1.80	83.48	68.28	10.44	9.57	4.99	45.10
	ξ_{dB}	MSE	SRWF	3.05	2.45	2.34	1.75	83.68	68.49	10.29	9.57	4.70	45.10
	$z(\xi_{\mathrm{dB}})$	MSE	MMSE-LSA	3.06	2.50	2.37	1.79	83.39	67.70	10.70	9.86	5.12	45.51
	$z(\xi_{\mathrm{dB}})$	MSE	SRWF	3.04	2.47	2.34	1.74	83.60	67.90	10.54	9.87	4.87	46.52
	ξ'_{dB}	MSE	MMSE-LSA	3.02	2.49	2.34	1.78	83.22	67.66	10.37	9.57	4.95	45.35
	ξ'_{dB}	MSE	SRWF	3.02	2.45	2.32	1.74	83.48	67.97	10.25	9.60	4.73	45.70
	ξ'_{dB}	BCE	MMSE-LSA	2.87	2.37	2.21	1.68	81.26	64.28	9.60	8.64	4.48	49.50
	ξ'_{dB}	BCE	SRWF	2.86	2.34	2.19	1.65	81.60	64.70	9.58	8.79	4.34	48.98
	$F(\xi_{\mathrm{dB}})$	MSE	MMSE-LSA	**3.16**	**2.57**	**2.47**	**1.87**	84.47	69.62	10.91	10.06	5.24	43.23
	$F(\xi_{\mathrm{dB}})$	MSE	SRWF	**3.16**	2.54	2.44	1.83	84.76	70.01	10.85	10.16	5.07	42.95
	$F(\xi_{\mathrm{dB}})$	BCE	MMSE-LSA	3.15	2.53	2.46	1.86	84.39	69.18	10.62	9.91	4.84	43.68
	$F(\xi_{\mathrm{dB}})$	BCE	SRWF	3.14	2.49	2.42	1.81	84.62	69.44	10.47	9.92	4.59	43.63
	$[\xi_{\mathrm{dB}}; \gamma_{\mathrm{dB}}]$	MSE	MMSE-LSA	3.08	2.53	2.39	1.81	83.44	67.75	10.60	9.75	5.27	45.65
	$[\xi'_{\mathrm{dB}}; \gamma'_{\mathrm{dB}}]$	MSE	MMSE-LSA	2.96	2.39	2.27	1.70	82.77	66.13	10.01	9.18	4.35	47.39
	$[\xi'_{\mathrm{dB}}; \gamma'_{\mathrm{dB}}]$	BCE	MMSE-LSA	2.94	2.41	2.27	1.71	82.39	65.71	9.95	9.07	4.56	47.76
	$[F(\xi_{\mathrm{dB}}); F(\gamma_{\mathrm{dB}})]$	MSE	MMSE-LSA	3.12	**2.57**	2.45	**1.87**	84.26	68.93	11.02	10.11	5.26	41.87
	$[F(\xi_{\mathrm{dB}}); F(\gamma_{\mathrm{dB}})]$	BCE	MMSE-LSA	3.11	2.51	2.41	1.81	83.81	68.16	10.58	9.84	4.87	43.90
	G_{WF}	MSE	–	3.11	2.45	2.40	1.79	85.33	70.12	10.50	10.00	4.27	42.17
	G_{CWF}	MSE	–	3.10	2.46	2.39	1.79	85.26	69.80	10.73	10.15	4.38	42.70
	$G_{\mathrm{MMSE-STSA}}$	MSE	–	**3.16**	2.53	2.45	1.83	85.62	**70.75**	**11.07**	10.39	4.82	41.76
	$G_{\mathrm{MMSE-STSA}}$	BCE	–	**3.16**	2.51	2.44	1.81	**85.85**	70.74	11.05	**10.46**	4.70	41.35
	$G_{\mathrm{MMSE-LSA}}$	MSE	–	3.10	2.49	2.39	1.79	85.56	70.22	10.85	10.22	4.62	42.69
	$G_{\mathrm{MMSE-LSA}}$	BCE	–	3.15	2.49	2.43	1.81	85.68	70.45	10.85	10.31	4.50	43.24

I. Robust ASR

In this subsection, we determine which training target, in the context of clean speech MS estimation, is most suited for an ASR front-end. Hence, we examine the WER in Tables IV,VII, V, and VI:

- In Table IV, G_{WF} achieved the best WER, followed by G_{CWF}.
- In Table VII, IAM achieved the best WER, followed by $G_{\mathrm{MMSE-STSA}}$.
- In Table V, G_{CWF} achieved the best WER, followed by IAM.
- In Table VI, $G_{\mathrm{MMSE-STSA}}$ achieved the best WER, followed by $G_{\mathrm{MMSE-LSA}}$.

The preceding points indicate that gain training targets (G_{WF}, IRM (i.e. G_{SRWF}), G_{CWF}, $G_{\mathrm{MMSE-STSA}}$, and $G_{\mathrm{MMSE-LSA}}$), as well as the IAM, are most suited for a front-end. The naive choice when selecting a training target is $|S_{\mathrm{dB}}|$, as the clean speech MS is the quantity to be estimated and it employs the simplest compression function amongst the MS training targets. By replacing $|S_{\mathrm{dB}}|$ with a more performative training target, such as G_{CWF}, a 4.39% reduction in WER can be realised (Table V)—resulting in a significant improvement. It should also be noted that the training targets that attained the lowest WER also attained high objective intelligibility scores, reinforcing the notion that WER is an objective measure of speech intelligibility (Thomas-Stonell *et al.*, 1998). This implies that the same trait that results in high objective intelligibility scores also results in a low WER—causing a low amount of speech distortion.

TABLE VIII. Mean CSIG scores for each condition of the test set from the Deep Xi dataset described in Subsection V C 2. The MMSE-LSA estimator is used by the MMSE training targets. The highest score for each condition is in boldface.

Noise	Target	SNR				
		-5	0	5	10	15
Voice babble	Noisy speech	1.91	2.24	2.64	3.08	3.58
	IRM+MSE	2.27	2.82	3.35	3.85	4.30
	IAM+MSE	2.25	2.83	3.37	3.89	**4.36**
	$\lvert S\rvert'$+BCE	2.34	2.85	3.35	3.82	4.23
	$\lvert S\rvert^{0.3}$+MSE	**2.37**	**2.93**	**3.42**	3.88	4.28
	$F(\xi_{\mathrm{dB}})$+MSE	2.25	2.82	3.36	3.88	4.35
	$[F(\xi_{\mathrm{dB}}); F(\gamma_{\mathrm{dB}})]$+MSE	2.22	2.78	3.34	3.85	4.34
	$G_{\mathrm{MMSE-STSA}}$+MSE	2.28	2.85	3.40	**3.91**	**4.36**
Street music	Noisy speech	1.33	1.61	1.97	2.41	2.93
	IRM+MSE	1.85	2.33	2.82	3.29	3.75
	IAM+MSE	1.85	2.35	2.85	3.32	3.76
	$\lvert S\rvert'$+BCE	**1.96**	2.41	2.87	3.30	3.70
	$\lvert S\rvert^{0.3}$+MSE	1.95	2.40	2.85	3.30	3.70
	$F(\xi_{\mathrm{dB}})$+MSE	1.91	2.44	2.95	**3.46**	3.92
	$[F(\xi_{\mathrm{dB}}); F(\gamma_{\mathrm{dB}})]$+MSE	1.87	2.39	2.92	3.43	**3.94**
	$G_{\mathrm{MMSE-STSA}}$+MSE	1.94	**2.46**	**2.97**	3.45	3.89
F16	Noisy speech	1.24	1.58	1.99	2.46	2.98
	IRM+MSE	2.30	2.74	3.16	3.60	4.04
	IAM+MSE	2.34	2.78	3.19	3.61	4.04
	$\lvert S\rvert'$+BCE	**2.51**	**2.91**	**3.30**	3.69	4.05
	$\lvert S\rvert^{0.3}$+MSE	2.50	2.89	3.27	3.66	4.01
	$F(\xi_{\mathrm{dB}})$+MSE	2.40	2.83	3.24	**3.72**	**4.14**
	$[F(\xi_{\mathrm{dB}}); F(\gamma_{\mathrm{dB}})]$+MSE	2.31	2.78	3.21	3.67	4.09
	$G_{\mathrm{MMSE-STSA}}$+MSE	2.36	2.81	3.23	3.66	4.08
Factory	Noisy speech	1.48	1.77	2.18	2.65	3.15
	IRM+MSE	2.15	2.61	3.04	3.50	3.91
	IAM+MSE	2.13	2.61	3.07	3.53	3.91
	$\lvert S\rvert'$+BCE	**2.25**	**2.68**	3.10	3.53	3.88
	$\lvert S\rvert^{0.3}$+MSE	**2.25**	**2.68**	3.08	3.47	3.85
	$F(\xi_{\mathrm{dB}})$+MSE	2.20	2.70	3.16	3.60	3.94
	$[F(\xi_{\mathrm{dB}}); F(\gamma_{\mathrm{dB}})]$+MSE	2.10	2.63	3.10	3.54	3.95
	$G_{\mathrm{MMSE-STSA}}$+MSE	2.13	**2.68**	**3.17**	**3.63**	**4.02**

J. Choice of objective measures

When investigating a proposed speech enhancement/separation method, it is important to consider multiple objective measures. For example, attaining the highest STOI and ESTOI scores is not an indication that a method will attain the lowest WER and be best for robust ASR. Moreover, if this study was conducted using a single objective measure, for example SDR, one would assume that the mMSA loss function is better than the MSE and BCE loss functions for the IAM—which would be an incorrect assumption in retrospect.

Another observation is that while it is clear that SDR, SI-SDR, and SegSNR measure the amount of distortion between the clean and enhanced/separated speech, it can be unclear how this translates to speech enhancement/separation performance. Do they measure overall quality? Speech distortion (which is different to the amount of distortion between the clean and enhanced/separated speech)? Background noise intrusiveness? Or even intelligibility? For example, SegSNR is considered an objective measure of quality, however, it has been shown to only moderately correlate with subjective scores of overall quality, speech distortion, or even background noise intrusiveness (Hu and Loizou, 2008). Moreover, a method that attains a high CBAK score can be considered good at background noise suppression, but it is unclear what a method is good at when it attains a high SegSNR. Therefore, we stress that SDR, SI-SDR, and SegSNR should be complimented with objective measures that correlate highly with subjective scores. And when feasible, conclusions drawn using objective measures should be validated using subjective testing (this study would be considered unfeasible due to the vast number of different methods).

VII. CONCLUSION

In this study, we compare CASA, MS, and MMSE training targets for clean speech MS estimation, with the aim of determining which produces enhanced/separated speech at the highest quality and intelligibility, and which is most suitable for an ASR front-end. We find that *a priori* SNR and joint *a priori* and *a posteriori* SNR training targets produce the highest quality enhanced/separated speech. We also find that gain training targets and the IAM not only produce the most intelligible enhanced/separated speech, but are also the most suited for an ASR front-end.

One finding was that if the clean speech MS is to be used as the training target, a compression function applied to its magnitude or power values is recommended, rather than its decibel values. Unless careful consideration is taken of

TABLE IX. Mean CBAK scores for each condition of the test set from the Deep Xi dataset described in Subsection V C 2. The MMSE-LSA estimator is used by the MMSE training targets. The highest score for each condition is in boldface.

Noise	Target	SNR				
		-5	0	5	10	15
Voice babble	Noisy speech	1.21	1.47	1.81	2.23	2.75
	IRM+MSE	1.57	1.95	2.40	2.89	3.40
	IAM+MSE	1.63	2.00	2.45	2.94	3.44
	$\lvert S\rvert'$+BCE	1.66	2.02	2.43	2.87	3.28
	$\lvert S\rvert^{0.3}$+MSE	**1.73**	**2.11**	**2.52**	2.95	3.34
	$F(\xi_{\mathrm{dB}})$+MSE	1.70	2.07	2.51	**2.99**	3.48
	$[F(\xi_{\mathrm{dB}}); F(\gamma_{\mathrm{dB}})]$+MSE	1.68	2.06	2.51	**2.99**	**3.50**
	$G_{\mathrm{MMSE-STSA}}$+MSE	1.66	2.05	2.50	2.98	3.47
Street music	Noisy speech	1.11	1.36	1.70	2.10	2.59
	IRM+MSE	1.63	1.97	2.36	2.79	3.24
	IAM+MSE	1.67	2.01	2.39	2.81	3.24
	$\lvert S\rvert'$+BCE	1.71	2.02	2.37	2.72	3.07
	$\lvert S\rvert^{0.3}$+MSE	**1.76**	2.08	2.42	2.77	3.11
	$F(\xi_{\mathrm{dB}})$+MSE	1.75	2.11	2.51	**2.97**	3.42
	$[F(\xi_{\mathrm{dB}}); F(\gamma_{\mathrm{dB}})]$+MSE	**1.76**	**2.12**	**2.53**	**2.97**	**3.45**
	$G_{\mathrm{MMSE-STSA}}$+MSE	1.73	2.09	2.49	2.93	3.37
F16	Noisy speech	1.13	1.37	1.67	2.04	2.49
	IRM+MSE	1.73	2.07	2.42	2.81	3.22
	IAM+MSE	1.79	2.12	2.45	2.82	3.21
	$\lvert S\rvert'$+BCE	1.84	2.15	2.47	2.82	3.13
	$\lvert S\rvert^{0.3}$+MSE	**1.90**	**2.21**	2.53	2.84	3.14
	$F(\xi_{\mathrm{dB}})$+MSE	1.87	**2.21**	**2.58**	**2.98**	3.35
	$[F(\xi_{\mathrm{dB}}); F(\gamma_{\mathrm{dB}})]$+MSE	1.85	2.20	**2.58**	**2.98**	**3.37**
	$G_{\mathrm{MMSE-STSA}}$+MSE	1.82	2.16	2.52	2.90	3.30
Factory	Noisy speech	1.14	1.41	1.75	2.14	2.61
	IRM+MSE	1.70	2.02	2.39	2.81	3.23
	IAM+MSE	1.73	2.07	2.43	2.83	3.21
	$\lvert S\rvert'$+BCE	1.76	2.07	2.41	2.78	3.09
	$\lvert S\rvert^{0.3}$+MSE	1.82	2.13	2.45	2.78	3.10
	$F(\xi_{\mathrm{dB}})$+MSE	**1.83**	**2.19**	**2.57**	**2.97**	3.32
	$[F(\xi_{\mathrm{dB}}); F(\gamma_{\mathrm{dB}})]$+MSE	1.79	2.15	2.55	2.95	**3.35**
	$G_{\mathrm{MMSE-STSA}}$+MSE	1.78	2.13	2.51	2.93	3.31

the distribution of its decibel values, a compression function could over-compress values above 0 dB, which correspond to speech formants and a very small proportion of the overall distribution. MS training targets were also found to perform the best at lower SNR levels (-5 and 0 dB). While it is unclear why this phenomenon occurs, we anticipate that the following may lead an answer: Unlike the other training targets, the distribution of the clean speech MS does not changing with the SNR. Another finding was that the CDF was the best compression function for *a priori* SNR and joint *a priori* and *a posteriori* SNR training targets. The uniform distribution that the CDF produces gives equal importance to all values during training, as opposed to the truncated bimodal distribution of the gain training targets, which gives more importance to noise and speech-dominant values during training. This causes *a priori* SNR and joint *a priori* and *a posteriori* SNR training targets to produce the best objective quality scores, and gain training targets to produce the best objective intelligibility scores.

Recommendations for future work include a comprehensive study on training targets that include phase information. This includes training targets that estimate the clean speech phase spectrum, complex spectrum, discrete-time samples, as well as training targets in the modulation domain. The phase spectrum can be estimated by using the derivatives of the phase in the time and frequency directions (Masuyama *et al.*, 2020). The most prominent training target for clean speech complex spectrum estimation is the cIRM (Williamson *et al.*, 2016). Aside from directly estimating the clean speech discrete-time samples, training targets for the Kalman filter and augmented Kalman filter are emerging in the literature (Roy *et al.*, 2020; Roy *et al.*, 2020). Training targets are also being explored in the modulation domain (Yan *et al.*, 2020). Attention should also be payed to the variability of the objective scores produced by a training target over multiple training runs. Additionally, a dataset that contains more samples per condition would allow for a statistical analysis of the performance of the training targets over individual conditions. The appropriate output layer activation function for use with the CDF compression function should also be investigated—as the CDF produces a uniform distribution between 0 and 1 (see Figure 1 (h)). This leads to using a piecewise linear function (with the same form as the uniform CDF) as the activation function of the output layer. This may lead to an improvement in performance over the currently used sigmoid function.

TABLE X. Mean COVL scores for each condition of the test set from the Deep Xi dataset described in Subsection V C 2. The MMSE-LSA estimator is used by the MMSE training targets. The highest score for each condition is in boldface.

Noise	Target	SNR				
		-5	0	5	10	15
Voice babble	Noisy speech	1.38	1.58	1.86	2.23	2.71
	IRM+MSE	1.61	2.03	2.50	3.00	3.49
	IAM+MSE	1.61	2.04	2.53	3.06	3.57
	$\lvert S\rvert'$+BCE	1.66	2.06	2.52	3.00	3.44
	$\lvert S\rvert^{0.3}$+MSE	**1.69**	**2.15**	**2.61**	**3.10**	3.53
	$F(\xi_{\mathrm{dB}})$+MSE	1.61	2.05	2.55	3.08	3.58
	$[F(\xi_{\mathrm{dB}}); F(\gamma_{\mathrm{dB}})]$+MSE	1.58	2.02	2.54	3.06	**3.60**
	$G_{\mathrm{MMSE-STSA}}$+MSE	1.63	2.07	2.57	3.09	3.59
Street music	Noisy speech	1.07	1.21	1.44	1.76	2.21
	IRM+MSE	1.36	1.71	2.12	2.57	3.04
	IAM+MSE	1.37	1.74	2.16	2.60	3.06
	$\lvert S\rvert'$+BCE	1.44	1.78	2.17	2.59	3.01
	$\lvert S\rvert^{0.3}$+MSE	**1.45**	1.80	2.21	2.64	3.05
	$F(\xi_{\mathrm{dB}})$+MSE	1.41	1.82	2.26	**2.77**	3.26
	$[F(\xi_{\mathrm{dB}}); F(\gamma_{\mathrm{dB}})]$+MSE	1.40	1.81	2.26	2.76	**3.29**
	$G_{\mathrm{MMSE-STSA}}$+MSE	1.43	**1.83**	**2.27**	2.75	3.21
F16	Noisy speech	1.05	1.20	1.46	1.80	2.24
	IRM+MSE	1.66	2.03	2.42	2.86	3.31
	IAM+MSE	1.70	2.07	2.46	2.88	3.32
	$\lvert S\rvert'$+BCE	**1.83**	**2.19**	2.57	2.98	3.36
	$\lvert S\rvert^{0.3}$+MSE	**1.83**	**2.19**	**2.58**	2.98	3.34
	$F(\xi_{\mathrm{dB}})$+MSE	1.74	2.12	2.55	**3.06**	**3.49**
	$[F(\xi_{\mathrm{dB}}); F(\gamma_{\mathrm{dB}})]$+MSE	1.70	2.11	2.54	3.02	3.46
	$G_{\mathrm{MMSE-STSA}}$+MSE	1.72	2.11	2.51	2.95	3.39
Factory	Noisy speech	1.17	1.31	1.55	1.89	2.31
	IRM+MSE	1.53	1.87	2.25	2.69	3.12
	IAM+MSE	1.53	1.88	2.28	2.73	3.12
	$\lvert S\rvert'$+BCE	1.61	1.94	2.31	2.74	3.09
	$\lvert S\rvert^{0.3}$+MSE	**1.62**	1.96	2.32	2.71	3.11
	$F(\xi_{\mathrm{dB}})$+MSE	1.59	**1.99**	**2.40**	**2.85**	3.19
	$[F(\xi_{\mathrm{dB}}); F(\gamma_{\mathrm{dB}})]$+MSE	1.53	1.93	2.36	2.79	3.21
	$G_{\mathrm{MMSE-STSA}}$+MSE	1.54	1.94	2.37	2.84	**3.24**

APPENDIX A:

1. MMSE estimator comparison

In this section, we provide objective scores for multiple MMSE estimators. Often, the gain function of the MMSE estimator provides a trade-off between background noise suppression and speech distortion (Loizou, 2013, Chaper 7, pp. 229–230). Here, we compare the WF (Lim and Oppenheim, 1979), CWF (Loizou, 2013), SRWF (Lim and Oppenheim, 1979), as well as the MMSE-STSA (Ephraim and Malah, 1984) and MMSE-LSA (Ephraim and Malah, 1985) estimators. As shown in Table XIII, the choice of gain function is indeed a compromise, with different MMSE estimators attaining the best objective scores for different measures. The WF produced the best scores for SDR, SI-SDR, and SegSNR, whilst also attaining the worst scores for CSIG, COVL, PESQ, STOI, and ESTOI. This indicates that the WF is best for reducing the distortion between the clean and enhanced/separated speech—at the cost of causing the most speech distortion. The SRWF produced the best STOI and ESTOI scores, indicating that it produces the most intelligible enhanced/separated speech. When comparing the objectives scores of the CWF to the SRWF, it appears that intelligibility performance is sacrificed for quality performance, and is able to attain the highest scores for CSIG, COVL, and PESQ. However, CWF is able to attain the lowest WER, indicating that it is best for robust ASR amongst the MMSE estimators. The MMSE-LSA estimator is the best at background noise suppression, and produces competitive objective scores for each measure.

2. Alternate DNN architectures

The multi-head attention network (MHANet) from Nicolson and Paliwal (2020a) is used in this study to evaluate the performance of each training target on an attention-based network. MHANet utilises multi-head self-attention to more efficiently model the long-term dependencies of noisy speech than TCNs and RNNs. MHANet employs masked self-attention, ensuring that inference is causal. The MHANet utilised here is identical to that used in Nicolson and Paliwal (2020a, Table Appendix A.2, configuration D), except that a learned position encoding of size 256 is added after the first layer (see "*first layer*" in Nicolson and Paliwal (2020a, Figure 2 (left))), as in Devlin *et al.*

TABLE XI. Mean ESTOI scores for each condition of the test set from the Deep Xi dataset described in Subsection V C 2. The MMSE-LSA estimator is used by the MMSE training targets. The highest score for each condition is in boldface.

Noise	Target	SNR				
		-5	0	5	10	15
Voice babble	Noisy speech	28.76	44.19	60.67	74.97	85.37
	IRM+MSE	40.67	59.88	74.74	84.93	91.02
	IAM+MSE	40.59	59.82	75.04	85.13	91.18
	$\lvert S\rvert'$+BCE	41.89	60.77	75.16	84.39	90.09
	$\lvert S\rvert^{0.3}$+MSE	41.62	**61.29**	75.49	84.53	89.89
	$F(\xi_{\mathrm{dB}})$+MSE	40.07	59.28	74.98	84.92	91.03
	$[F(\xi_{\mathrm{dB}}); F(\gamma_{\mathrm{dB}})]$+MSE	38.31	58.27	74.21	84.59	90.87
	$G_{\mathrm{MMSE-STSA}}$+MSE	**42.14**	61.26	**75.99**	**85.51**	**91.25**
Street music	Noisy speech	30.39	44.03	58.15	71.13	81.80
	IRM+MSE	44.74	60.95	73.93	82.82	88.79
	IAM+MSE	44.99	61.96	74.47	83.16	88.92
	$\lvert S\rvert'$+BCE	47.00	62.48	74.02	82.26	87.68
	$\lvert S\rvert^{0.3}$+MSE	45.14	61.79	73.92	82.02	87.40
	$F(\xi_{\mathrm{dB}})$+MSE	42.45	60.97	74.29	83.26	89.20
	$[F(\xi_{\mathrm{dB}}); F(\gamma_{\mathrm{dB}})]$+MSE	42.25	60.29	73.48	82.73	89.09
	$G_{\mathrm{MMSE-STSA}}$+MSE	**45.77**	**62.75**	**75.47**	**83.72**	**89.27**
F16	Noisy speech	27.45	41.89	56.70	70.27	81.30
	IRM+MSE	48.00	63.92	75.79	84.15	90.11
	IAM+MSE	48.81	64.63	76.04	84.40	90.27
	$\lvert S\rvert'$+BCE	**51.00**	**65.10**	75.70	83.42	88.62
	$\lvert S\rvert^{0.3}$+MSE	48.14	63.92	74.92	82.71	87.87
	$F(\xi_{\mathrm{dB}})$+MSE	45.38	62.69	75.39	84.03	89.83
	$[F(\xi_{\mathrm{dB}}); F(\gamma_{\mathrm{dB}})]$+MSE	44.64	62.51	75.17	83.69	89.64
	$G_{\mathrm{MMSE-STSA}}$+MSE	47.01	64.26	**76.24**	**84.52**	**90.32**
Factory	Noisy speech	25.03	38.45	53.30	68.09	80.42
	IRM+MSE	40.54	57.18	71.52	81.64	88.50
	IAM+MSE	40.36	58.17	**72.25**	**82.20**	88.77
	$\lvert S\rvert'$+BCE	**42.01**	**59.22**	72.23	81.50	87.40
	$\lvert S\rvert^{0.3}$+MSE	41.01	58.40	71.56	80.39	86.37
	$F(\xi_{\mathrm{dB}})$+MSE	37.85	56.03	71.48	81.46	87.81
	$[F(\xi_{\mathrm{dB}}); F(\gamma_{\mathrm{dB}})]$+MSE	35.96	54.52	70.29	80.51	87.68
	$G_{\mathrm{MMSE-STSA}}$+MSE	39.32	57.24	72.17	82.04	**88.81**

(2019). The time-frame index indicates the position. The position encoding is learned using weight matrix $\mathbf{W}_p$, with a maximum length of 2048 time-frames (i.e. $\mathbf{W}_p \in \mathbb{R}^{2048\times 256}$). The addition of the learned position encoding provides an improvement in the objective scores obtained by MHANet (see the objective scores in the results section between *MHANet-1.0c* (MHANet with no position encoding) and *MHANet-1.1c* (MHANet with the learned position encoding) at https://github.com/anicolson/DeepXi (accessed 04/01/2021)). The bidirectional long short-term memory (BiLSTM) network of Chimera++ from (Wang *et al.*, 2018) is used in this study to evaluate the performance of each training target on an RNN. The twin heads of Chimera++ are replaced by a single head in this work. To indicate this difference, we denote the network as BiLSTM-Chimera++. As a bidirectional RNN is employed, inference is non-causal, unlike ResNet-TCN and MHANet. MHANet and BiLSTM-Chimera++ are both trained on the DEMAND Voice Bank dataset described in Subsection V C 1 using the training strategy described in Subsection V A. The objective scores for MHANet and BiLSTM-Chimera++ are given in Tables V and VI, respectively.

[1]Note that the parameters required for each compression function are omitted for convenience. For example $z(|S_{\mathrm{dB}}[l,k]|; \mu_k, \sigma_k)$ is simplified to $z(|S_{\mathrm{dB}}[l,k]|)$.

[2]Deep Xi is available at: https://github.com/anicolson/DeepXi.

[3]For a comparison of the ResNet-TCN used here to that used in Zhang *et al.* (2020), please see https://github.com/anicolson/DeepXi.

[4]Freesound packs that are used include 147, 199, 247, 379, 622, 643, 1 133, 1 563, 1 840, 2 432, 4 366, 4 439, 4 780, 8 420, 14 826, 15 046, 15 097, 15 598, 16 204, 17 266, 17 403, 17 430, 17 468, 17 579, 19 093, 20 237, 20 241, 21 558, 22 953, and 24 590.

[5]Project DeepSpeech is available at: https://github.com/mozilla/DeepSpeech (model 0.7.4 is used).

Abadi, M., Agarwal, A., Barham, P., Brevdo, E., Chen, Z., Citro, C., Corrado, G. S., Davis, A., Dean, J., Devin, M., Ghemawat, S., Goodfellow, I., Harp, A., Irving, G., Isard, M., Jia, Y., Jozefowicz, R., Kaiser, L., Kudlur, M., Levenberg, J., Mané, D., Monga, R., Moore, S., Murray, D., Olah, C., Schuster, M., Shlens, J., Steiner, B., Sutskever, I., Talwar, K., Tucker, P., Vanhoucke, V., Vasudevan, V., Viégas, F., Vinyals, O., Warden, P., Wattenberg, M., Wicke, M., Yu, Y., and Zheng, X. (**2015**). "TensorFlow: Large-scale machine learning on heterogeneous systems" https://www.tensorflow.org/, software available from tensorflow.org.

Allen, J. (**1977**). "Short term spectral analysis, synthesis, and modification by discrete Fourier transform," IEEE Transactions on Acoustics, Speech, and Signal Processing **25**(3), 235–238.

Allen, J. B., and Rabiner, L. R. (**1977**). "A unified approach to short-time Fourier analysis and synthesis," Proceedings of the IEEE **65**(11), 1558–1564.

TABLE XII. Mean WER for each condition of the test set from the Deep Xi dataset described in Subsection V C 2. The MMSE-LSA estimator is used by the MMSE training targets. The lowest WER for each condition is in boldface.

Noise	Target	SNR				
		-5	0	5	10	15
Voice babble	Noisy speech	100.00	89.17	50.79	21.07	12.59
	IRM+MSE	91.60	59.43	32.12	15.05	**9.21**
	IAM+MSE	**87.44**	62.68	32.18	12.58	10.11
	$\lvert S\rvert'$+BCE	92.98	64.32	31.22	**12.12**	11.36
	$\lvert S\rvert^{0.3}$+MSE	91.22	56.06	29.01	14.36	10.00
	$F(\xi_{\mathrm{dB}})$+MSE	90.89	**54.68**	30.08	13.98	9.93
	$\left[F(\xi_{\mathrm{dB}}); F(\gamma_{\mathrm{dB}})\right]$+MSE	87.56	59.85	**28.32**	13.49	10.13
	$G_{\mathrm{MMSE-STSA}}$+MSE	92.80	59.73	28.83	12.51	11.37
Street music	Noisy speech	98.05	88.60	56.59	26.24	16.16
	IRM+MSE	83.57	52.56	24.88	14.54	14.34
	IAM+MSE	83.24	**51.32**	**20.98**	15.26	12.62
	$\lvert S\rvert'$+BCE	81.86	56.65	25.67	17.49	14.45
	$\lvert S\rvert^{0.3}$+MSE	84.54	64.38	27.48	14.99	13.23
	$F(\xi_{\mathrm{dB}})$+MSE	**80.28**	51.50	29.06	15.18	**9.69**
	$\left[F(\xi_{\mathrm{dB}}); F(\gamma_{\mathrm{dB}})\right]$+MSE	83.75	59.38	29.21	14.64	12.46
	$G_{\mathrm{MMSE-STSA}}$+MSE	79.31	55.83	26.33	**13.03**	10.07
F16	Noisy speech	98.83	99.60	63.17	30.14	18.45
	IRM+MSE	89.38	56.66	**23.94**	14.48	14.19
	IAM+MSE	86.71	49.82	25.82	14.97	13.76
	$\lvert S\rvert'$+BCE	**84.49**	60.11	30.34	19.20	16.79
	$\lvert S\rvert^{0.3}$+MSE	88.95	57.60	36.72	18.23	14.51
	$F(\xi_{\mathrm{dB}})$+MSE	95.83	58.92	27.62	14.13	13.83
	$\left[F(\xi_{\mathrm{dB}}); F(\gamma_{\mathrm{dB}})\right]$+MSE	90.66	50.05	24.82	**13.38**	**9.39**
	$G_{\mathrm{MMSE-STSA}}$+MSE	91.17	**47.66**	26.87	14.46	14.17
Factory	Noisy speech	97.66	97.14	66.70	31.86	14.83
	IRM+MSE	90.79	65.78	47.02	25.69	**6.38**
	IAM+MSE	90.02	67.29	50.89	35.68	8.64
	$\lvert S\rvert'$+BCE	93.78	**63.14**	53.06	23.73	9.17
	$\lvert S\rvert^{0.3}$+MSE	**86.30**	69.24	56.98	36.14	10.08
	$F(\xi_{\mathrm{dB}})$+MSE	92.35	77.96	62.36	28.07	8.25
	$\left[F(\xi_{\mathrm{dB}}); F(\gamma_{\mathrm{dB}})\right]$+MSE	91.76	67.23	**45.57**	30.16	15.70
	$G_{\mathrm{MMSE-STSA}}$+MSE	95.05	74.30	50.37	**18.94**	12.35

TABLE XIII. Mean objective scores of multiple MMSE estimators on the test set of the DEMAND Voice Bank dataset described in Subsection V C 1. MHANet with $\left[F(\xi_{\mathrm{dB}}); F(\gamma_{\mathrm{dB}})\right]$ as the training target (using BCE as the loss function) is used to estimate the *a priori* and *a posteriori* SNR. The highest score for each measure—except WER—is in boldface. The lowest WER is in boldface. Values for STOI, ESTOI, and WER are given as percentages.

MMSE est.	CSIG	CBAK	COVL	PESQ	STOI	ESTOI	SDR	SI-SDR	SegSNR	WER
Noisy speech	3.50	2.47	2.73	1.99	91.53	78.31	8.68	8.39	1.71	30.03
WF	3.86	3.45	3.35	2.83	93.51	84.42	**20.22**	**18.51**	**9.89**	26.59
SRWF	4.31	3.41	3.62	2.89	**94.05**	**84.96**	18.06	17.27	8.47	25.03
CWF	**4.38**	3.49	**3.72**	**3.01**	94.02	84.94	18.98	17.77	8.84	**24.31**
MMSE-STSA	4.34	3.47	3.67	2.95	93.99	84.88	18.62	17.62	8.87	24.66
MMSE-LSA	4.35	**3.52**	3.70	3.00	93.98	84.92	19.29	18.07	9.30	24.67

Ba, J. L., Kiros, J. R., and Hinton, G. E. (**2016**). "Layer normalization," arXiv:1607.06450 [stat.ML] .

Beerends, J. G., Schmidmer, C., Berger, J., Obermann, M., Ullmann, R., Pomy, J., and Keyhl, M. (**2013**). "Perceptual objective listening quality assessment (POLQA), the third generation ITU-T standard for end-to-end speech quality measurement part I—temporal alignment," Journal of the Audio Engineering Society **61**(6), 366–384.

Bhat, G. S., Shankar, N., Reddy, C. K. A., and Panahi, I. M. S. (**2017**). "Formant frequency-based speech enhancement technique to improve intelligibility for hearing aid users with smartphone as an assistive device," in *2017 IEEE Healthcare Innovations and Point of Care Technologies (HI-POCT)*, pp. 32–35, doi: 10.1109/HIC.2017.8227577.

Cappe, O. (**1994**). "Elimination of the musical noise phenomenon with the ephraim and malah noise suppressor," IEEE Transactions on Speech and Audio Processing **2**(2), 345–349.

Cohen, I. (**2003**). "Noise spectrum estimation in adverse environments: Improved minima controlled recursive averaging," IEEE Transactions on Speech and Audio Processing **11**(5), 466–475.

Crochiere, R. (**1980**). "A weighted overlap-add method of short-time Fourier analysis/synthesis," IEEE Transactions on Acoustics, Speech, and Signal Processing **28**(1), 99–102.

Dean, D. B., Sridharan, S., Vogt, R. J., and Mason, M. W. (**2010**). "The QUT-NOISE-TIMIT corpus for the evaluation of voice activity detection algorithms," in *In INTERSPEECH-2010*, pp. 3110–3113.

Devlin, J., Chang, M.-W., Lee, K., and Toutanova, K. (**2019**). "BERT: Pre-training of deep bidirectional transformers for language understanding," in *Proceedings of the 2019 Conference of the North American Chapter of the Association for Computational Linguistics: Human Language Technologies, Volume 1 (Long and Short Papers)*, Association for Computational Linguistics, Minneapolis, Minnesota,

pp. 4171–4186, https://www.aclweb.org/anthology/N19-1423, doi: 10.18653/v1/N19-1423.

Ephraim, Y., and Malah, D. (**1984**). "Speech enhancement using a minimum-mean square error short-time spectral amplitude estimator," IEEE Transactions on Acoustics, Speech, and Signal Processing **32**(6), 1109–1121.

Ephraim, Y., and Malah, D. (**1985**). "Speech enhancement using a minimum mean-square error log-spectral amplitude estimator," IEEE Transactions on Acoustics, Speech, and Signal Processing **33**(2), 443–445.

Ephrat, A., Mosseri, I., Lang, O., Dekel, T., Wilson, K., Hassidim, A., Freeman, W. T., and Rubinstein, M. (**2018**). "Looking to listen at the cocktail party: A speaker-independent audio-visual model for speech separation," ACM Trans. Graph. **37**(4), https://doi.org/10.1145/3197517.3201357, doi: 10.1145/3197517.3201357.

Erdogan, H., Hershey, J. R., Watanabe, S., and Le Roux, J. (**2015**). "Phase-sensitive and recognition-boosted speech separation using deep recurrent neural networks," in *2015 IEEE International Conference on Acoustics, Speech and Signal Processing (ICASSP)*, pp. 708–712.

Hannun, A., Case, C., Casper, J., Catanzaro, B., Diamos, G., Elsen, E., Prenger, R., Satheesh, S., Sengupta, S., Coates, A. *et al.* (**2014**). "Deep speech: Scaling up end-to-end speech recognition," arXiv:1412.5567 [cs.CL] .

He, K., Zhang, X., Ren, S., and Sun, J. (**2016**). "Deep residual learning for image recognition," in *The IEEE Conference on Computer Vision and Pattern Recognition (CVPR)*.

Hu, G., and Wang, D. (**2010**). "A tandem algorithm for pitch estimation and voiced speech segregation," IEEE Transactions on Audio, Speech, and Language Processing **18**(8), 2067–2079.

Hu, Y., and Loizou, P. C. (**2008**). "Evaluation of objective quality measures for speech enhancement," IEEE Transactions on Audio, Speech, and Language Processing **16**(1), 229–238.

Jensen, J., and Taal, C. H. (**2016**). "An algorithm for predicting the intelligibility of speech masked by modulated noise maskers," IEEE/ACM Transactions on Audio, Speech, and Language Processing **24**(11), 2009–2022, doi: 10.1109/TASLP.2016.2585878.

Kingma, D. P., and Ba, J. (**2014**). "Adam: A method for stochastic optimization," arXiv:1412.6980 [cs.LG] .

Kriman, S., Beliaev, S., Ginsburg, B., Huang, J., Kuchaiev, O., Lavrukhin, V., Leary, R., Li, J., and Zhang, Y. (**2020**). "Quartznet: Deep automatic speech recognition with 1D time-channel separable convolutions," in *ICASSP 2020 - 2020 IEEE International Conference on Acoustics, Speech and Signal Processing (ICASSP)*, pp. 6124–6128.

Le Prell, C. G., and Clavier, O. H. (**2017**). "Effects of noise on speech recognition: Challenges for communication by service members," Hearing Research **349**, 76 – 89, http://www.sciencedirect.com/science/article/pii/S0378595516303513, doi: https://doi.org/10.1016/j.heares.2016.10.004 noise in the Military.

Lim, J. S., and Oppenheim, A. V. (**1979**). "Enhancement and bandwidth compression of noisy speech," Proceedings of the IEEE **67**(12), 1586–1604.

Loizou, P. C. (**2005**). "Speech enhancement based on perceptually motivated Bayesian estimators of the magnitude spectrum," IEEE Transactions on Speech and Audio Processing **13**(5), 857–869.

Loizou, P. C. (**2013**). *Speech Enhancement: Theory and Practice*, 2nd ed. (CRC Press, Inc., USA).

Luo, Y., Chen, Z., Hershey, J. R., Le Roux, J., and Mesgarani, N. (**2017**). "Deep clustering and conventional networks for music separation: Stronger together," in *2017 IEEE International Conference on Acoustics, Speech and Signal Processing (ICASSP)*, pp. 61–65, doi: 10.1109/ICASSP.2017.7952118.

Luo, Y., and Mesgarani, N. (**2019**). "Conv-TasNet: Surpassing ideal time–frequency magnitude masking for speech separation," IEEE/ACM Transactions on Audio, Speech, and Language Processing **27**(8), 1256–1266, doi: 10.1109/TASLP.2019.2915167.

Martin, R. (**2005**). "Speech enhancement based on minimum mean-square error estimation and supergaussian priors," IEEE Transactions on Speech and Audio Processing **13**(5), 845–856.

Masuyama, Y., Yatabe, K., Koizumi, Y., Oikawa, Y., and Harada, N. (**2020**). "Phase reconstruction based on recurrent phase unwrapping with deep neural networks," in *ICASSP 2020 - 2020 IEEE International Conference on Acoustics, Speech and Signal Processing (ICASSP)*, pp. 826–830, doi: 10.1109/ICASSP40776.2020.9053234.

Mermelstein, P. (**1979**). "Evaluation of a segmental SNR measure as an indicator of the quality of ADPCM coded speech," The Journal of the Acoustical Society of America **66**(6), 1664–1667, https://doi.org/10.1121/1.383638, doi: 10.1121/1.383638.

Morioka, C., Kurashima, A., and Takahashi, A. (**2005**). "Proposal on objective speech quality assessment for wideband IP telephony," in *Proceedings. (ICASSP '05). IEEE International Conference on Acoustics, Speech, and Signal Processing, 2005.*, Vol. 1, pp. 49–52.

Moritz, N., Hori, T., and Le, J. (**2020**). "Streaming automatic speech recognition with the transformer model," in *ICASSP 2020 - 2020 IEEE International Conference on Acoustics, Speech and Signal Processing (ICASSP)*, pp. 6074–6078.

Narayanan, A., and Wang, D. (**2013**). "Ideal ratio mask estimation using deep neural networks for robust speech recognition," in *2013 IEEE International Conference on Acoustics, Speech and Signal Processing*, pp. 7092–7096.

Nicolson, A. (**2020**). "Deep Xi training set," IEEE Dataport http://dx.doi.org/10.21227/3adt-pb04, doi: 10.21227/3adt-pb04.

Nicolson, A., and Paliwal, K. K. (**2019**a). "Deep learning for minimum mean-square error approaches to speech enhancement," Speech Communication **111**, 44 – 55, http://www.sciencedirect.com/science/article/pii/S0167639318304308, doi: https://doi.org/10.1016/j.specom.2019.06.002.

Nicolson, A., and Paliwal, K. K. (**2019**b). "Deep Xi as a front-end for robust automatic speech recognition," arXiv:1906.07319 [eess.AS] .

Nicolson, A., and Paliwal, K. K. (**2020**a). "Masked multi-head self-attention for causal speech enhancement," Speech Communication **125**, 80 – 96, http://www.sciencedirect.com/science/article/pii/S0167639320302806, doi: https://doi.org/10.1016/j.specom.2020.10.004.

Nicolson, A., and Paliwal, K. K. (**2020**b). "Sum-product networks for robust automatic speaker identification," in *Proc. Interspeech 2020*.

Nikzad, M., Nicolson, A., Gao, Y., Zhou, J., Paliwal, K. K., and Shang, F. (**2020**). "Deep residual-dense lattice network for speech enhancement," in *The Thirty-Fourth AAAI Conference on Artificial Intelligence (AAAI-20)*, pp. 8552–8559.

Panayotov, V., Chen, G., Povey, D., and Khudanpur, S. (**2015**). "Librispeech: An asr corpus based on public domain audio books," in *2015 IEEE International Conference on Acoustics, Speech and Signal Processing (ICASSP)*, pp. 5206–5210.

Pascual, S., Bonafonte, A., and Serrà, J. (**2017**). "SEGAN: Speech enhancement generative adversarial network," in *Proc. Interspeech 2017*, pp. 3642–3646, http://dx.doi.org/10.21437/Interspeech.2017-1428, doi: 10.21437/Interspeech.2017-1428.

Rix, A. W., Beerends, J. G., Hollier, M. P., and Hekstra, A. P. (**2001**). "Perceptual evaluation of speech quality (PESQ)-a new method for speech quality assessment of telephone networks and codecs," in *2001 IEEE International Conference on Acoustics, Speech, and Signal Processing. Proceedings (Cat. No.01CH37221)*, Vol. 2, pp. 749–752 vol.2.

Roux, J. L., Wisdom, S., Erdogan, H., and Hershey, J. R. (**2019**). "SDR – half-baked or well done?," in *ICASSP 2019 - 2019 IEEE International Conference on Acoustics, Speech and Signal Processing (ICASSP)*, pp. 626–630, doi: 10.1109/ICASSP.2019.8683855.

Roy, S. K., Nicolson, A., and Paliwal, K. K. (**2020**). "A deep learning-based Kalman filter for speech enhancement," in *Proc. Interspeech 2020*.

Roy, S. K., Nicolson, A., and Paliwal, K. K. (**2020**). "Deep learning with augmented Kalman filter for single-channel speech enhancement," in *2020 IEEE International Symposium on Circuits and Systems (ISCAS)*, pp. 1–5, doi: 10.1109/ISCAS45731.2020.9180820.

Saki, F., Sehgal, A., Panahi, I., and Kehtarnavaz, N. (**2016**). "Smartphone-based real-time classification of noise signals using subband features and random forest classifier," in *2016 IEEE International Conference on Acoustics, Speech and Signal Processing (ICASSP)*, pp. 2204–2208.

Salamon, J., Jacoby, C., and Bello, J. P. (**2014**). "A dataset and taxonomy for urban sound research," in *Proceedings of the 22nd ACM International Conference on Multimedia*, MM '14, Association for Computing Machinery, New York, NY, USA, p. 1041–1044, https://doi.org/10.1145/2647868.2655045, doi: 10.1145/2647868.2655045.

Schluter, R., Bezrukov, I., Wagner, H., and Ney, H. (**2007**). "Gammatone features and feature combination for large vocabulary speech recognition," in *2007 IEEE International Conference on Acoustics, Speech and Signal Processing - ICASSP '07*, Vol. 4, pp. IV–649–IV–652.

Snyder, D., Chen, G., and Povey, D. (**2015**). "MUSAN: A music, speech, and noise corpus," arXiv:1510.08484 [cs.SD] .

Srinivasan, S., Roman, N., and Wang, D. (**2006**). "Binary and ratio time-frequency masks for robust speech recognition," Speech Communication **48**(11), 1486 – 1501, http://www.sciencedirect.com/science/article/pii/S0167639306001129, doi: https://doi.org/10.1016/j.specom.2006.09.003 robustness Issues for Conversational Interaction.

Steeneken, H. J., and Geurtsen, F. W. (**1988**). "Description of the RSG-10 noise database," Report IZF 1988-3, TNO Institute for Perception, Soesterberg, The Netherlands .

Taal, C. H., Hendriks, R. C., Heusdens, R., and Jensen, J. (**2011**). "An algorithm for intelligibility prediction of time-frequency weighted noisy speech," IEEE Transactions on Audio, Speech, and Language Processing **19**(7), 2125–2136.

Tawara, N., Kobayashi, T., and Ogawa, T. (**2019**). "Multi-Channel Speech Enhancement Using Time-Domain Convolutional Denoising Autoencoder," in *Proc. Interspeech 2019*, pp. 86–90, http://dx.doi.org/10.21437/Interspeech.2019-3197, doi: 10.21437/Interspeech.2019-3197.

Thiemann, J., Ito, N., and Vincent, E. (**2013**). "The diverse environments multi-channel acoustic noise database (DEMAND): A database of multichannel environmental noise recordings," Proceedings of Meetings on Acoustics **19**(1), 035081, https://asa.scitation.org/doi/abs/10.1121/1.4799597, doi: 10.1121/1.4799597.

Thomas-Stonell, N., Kotler, A.-L., Leeper, H., and Doyle, P. (**1998**). "Computerized speech recognition: Influence of intelligibility and perceptual consistency on recognition accuracy," Augmentative and Alternative Communication **14**(1), 51–56, https://doi.org/10.1080/07434619812331278196, doi: 10.1080/07434619812331278196.

Valentini-Botinhao, C., Wang, X., Takaki, S., and Yamagishi, J. (**2016**). "Investigating RNN-based speech enhancement methods for noise-robust text-to-speech," in *9th ISCA Speech Synthesis Workshop*, pp. 146–152, http://dx.doi.org/10.21437/SSW.2016-24, doi: 10.21437/SSW.2016-24.

Vary, P., and Martin, R. (**2006**). *Digital Speech Transmission: Enhancement, Coding And Error Concealment* (John Wiley & Sons, Inc., Hoboken, NJ, USA).

Veaux, C., Yamagishi, J., and King, S. (**2013**). "The voice bank corpus: Design, collection and data analysis of a large regional accent speech database," in *2013 International Conference Oriental COCOSDA held jointly with 2013 Conference on Asian Spoken Language Research and Evaluation (O-COCOSDA/CASLRE)*, pp. 1–4.

Veaux, C., Yamagishi, J., and MacDonald, K. (**2017**). "CSTR VCTK corpus: English multi-speaker corpus for CSTR voice cloning toolkit," Technical Report.

Vincent, E., Gribonval, R., and Fevotte, C. (**2006**). "Performance measurement in blind audio source separation," IEEE Transactions on Audio, Speech, and Language Processing **14**(4), 1462–1469, doi: 10.1109/TSA.2005.858005.

Wang, D. (**2005**). "On ideal binary mask as the computational goal of auditory scene analysis," in *Speech Separation by Humans and Machines*, edited by P. Divenyi (Springer US, Boston, MA), pp. 181–197, https://doi.org/10.1007/0-387-22794-6_12, doi: 10.1007/0-387-22794-6_12.

Wang, D., and Brown, G. J. (**2006**). *Computational Auditory Scene Analysis: Principles, Algorithms, and Applications* (Wiley-IEEE Press).

Wang, Y., Mohamed, A., Le, D., Liu, C., Xiao, A., Mahadeokar, J., Huang, H., Tjandra, A., Zhang, X., Zhang, F., Fuegen, C., Zweig, G., and Seltzer, M. L. (**2020**). "Transformer-based acoustic modeling for hybrid speech recognition," in *ICASSP 2020 - 2020 IEEE International Conference on Acoustics, Speech and Signal Processing (ICASSP)*, pp. 6874–6878.

Wang, Y., Narayanan, A., and Wang, D. (**2014**). "On training targets for supervised speech separation," IEEE/ACM Transactions on Audio, Speech, and Language Processing **22**(12), 1849–1858.

Wang, Y., and Wang, D. (**2013**). "Towards scaling up classification-based speech separation," IEEE Transactions on Audio, Speech, and Language Processing **21**(7), 1381–1390.

Wang, Z., Roux, J. L., and Hershey, J. R. (**2018**). "Alternative objective functions for deep clustering," in *2018 IEEE International Conference on Acoustics, Speech and Signal Processing (ICASSP)*, pp. 686–690, doi: 10.1109/ICASSP.2018.8462507.

Williamson, D. S., Wang, Y., and Wang, D. (**2016**). "Complex ratio masking for monaural speech separation," IEEE/ACM Transactions on Audio, Speech, and Language Processing **24**(3), 483–492.

Xu, J., Sun, X., Zhang, Z., Zhao, G., and Lin, J. (**2019**). "Understanding and improving layer normalization," in *Advances in Neural Information Processing Systems 32*, edited by H. Wallach, H. Larochelle, A. Beygelzimer, F. d'Alché Buc, E. Fox, and R. Garnett (Curran Associates, Inc.), pp. 4381–4391, http://papers.nips.cc/paper/8689-understanding-and-improving-layer-normalization.pdf.

Xu, Y., Du, J., Dai, L., and Lee, C. (**2015**). "A regression approach to speech enhancement based on deep neural networks," IEEE/ACM Transactions on Audio, Speech, and Language Processing **23**(1), 7–19.

Yan, B. C., Wu, M. C., and Chen, B. (**2020**). "Exploring feature enhancement in the modulation spectrum domain via ideal ratio mask for robust speech recognition," in *2020 Asia-Pacific Signal and Information Processing Association Annual Summit and Conference (APSIPA ASC)*, pp. 759–763.

Zhang, Q., Nicolson, A., Wang, M., Paliwal, K. K., and Wang, C. (**2020**). "DeepMMSE: A deep learning approach to MMSE-based noise power spectral density estimation," IEEE/ACM Transactions on Audio, Speech, and Language Processing **28**, 1404–1415.

Zhang, Z., Geiger, J., Pohjalainen, J., Mousa, A. E.-D., Jin, W., and Schuller, B. (**2018**). "Deep learning for environmentally robust speech recognition: An overview of recent developments," ACM Trans. Intell. Syst. Technol. **9**(5), https://doi.org/10.1145/3178115, doi: 10.1145/3178115.

Zhao, Y., Wang, Z., and Wang, D. (**2017**). "A two-stage algorithm for noisy and reverberant speech enhancement," in *2017 IEEE International Conference on Acoustics, Speech and Signal Processing (ICASSP)*, pp. 5580–5584.

Zheng, N., and Zhang, X. (**2019**). "Phase-aware speech enhancement based on deep neural networks," IEEE/ACM Transactions on Audio, Speech, and Language Processing **27**(1), 63–76, doi: 10.1109/TASLP.2018.2870742.