RED ROOSTER

LIFTING

AIR HOIST & TROLLEY
USER MANUAL

MODEL - TNC-50TW/4-AT25-2S

FRONT COVER

CONTENTS

INTRODUCTION & SPECIFICATION

SECTION 1: GETTING STARTED

1.1 UNPACKING & SPECIFICATION
1.2 OPERATION
1.3 CHECKS BEFORE USE & HOSE SUPPORT BRACKET
1.4 INSTALLATION
1.5 TECHNICAL CHARACTERISTICS
1.6 HOIST CHECKS
1.7 HOIST CONTROLS
1.8 ADDITIONAL INSTALLATION INSTRUCTIONS
1.9 INSTALLING THE HOIST & TROLLEY
1.10 ASSEMBLY & INSTALLATION

SECTION 2: LUBRICATION

SECTION 3: SAFE OPERATION

3.1 HOIST OPERATORS & FORESEEABLE INCORRECT USE
3.2 SAFETY EQUIPMENT - PPE
3.3 LIFTING GEAR BELOW THE HOIST
3.4 OPERATIONAL BREAKDOWN OR ACCIDENT

SECTION 4: MAINTENANCE

4.1 GENERAL
4.2 REPAIRS
4.3 TROLLEY VANE MOTOR MAINTENANCE
4.4 SILENCING
4.5 CHANGING HOIST SILENCERS
4.6 CHAINGING TROLLEY SILENCERS
4.7 FITTING OR REPLACING LOAD CHAIN
4.8 TYPES OF CHAIN
4.9 EMERGENCY LOWERING
4.10 HOIST COMPONENTS AND CHAIN
4.11 SERVICE DATA

SECTION 5: LAYING UP THE HOIST

SECTION 6: CHAIN COLLECTORS

SECTION 7: SPEED & LOAD LIMITER ADJUSTMENT

SECTION 8: OPERATIONAL BREAKDOWN / TROUBLESHOOTING THE TNC HOIST

SECTION 9: PERIODIC EXAMINATION & TESTING

9.1 EXAMINATION
9.2 SIX MONTHLY OFFSHORE INSPECTION
9.3 TESTING

SECTION 10: DUTY RATINGS

SECTION 11: EXPLOSION PROTECTION

SECTION 12: TECHNICAL SPECIFICATION

SECTION 13: DATA SHEET

SECTION 14: DRAWINGS AND PARTS LISTS

SECTION 15: ACCESSORIES

SECTION 16: LOG BOOK

INTRODUCTION AND SPECIFICATION

Thank you for choosing the TNC pneumatic chain hoist which are available from 10 to 50 tonne.

Provided that the hoist is used and maintained in accordance with this manual it will afford you many years of reliable service.

Red Rooster hoists comply with the latest standards and are designed for safe and efficient operation.

Before installing the unit, please ensure that both the personnel responsible for installation, maintenance and operation are fully acquainted with the sections of this manual which are relevant to them.

This manual should be accessible at all times to the relevant person, in case of loss ask your dealer for a new copy.

SWL (TONNE)	MODEL	CHAIN FALLS	WEIGHT (KG)		FULL LOAD LIFTING SPEED (M/MIN)	FLR SIZE	MINIMUM HOSE SIZE (ID)
			3M HOL	EXTRA P/M			
10.0	TNC 10TW LPE	2	210	11.4	1.5	1"	1“
15.0	TNC 15TW/3	3	320	17.1	1.0	1"	1“
20.0	TNC 20TW/4	4	470	22.2	0.7	1"	1“
25.0	TNC 25TW LPE	2	490	21.8	0.6	1"	1“
37.5	TNC 37.5TW/3	3	870	32.7	0.4	1"	1“
50.0	TNC 50TW/4	4	1110	43.6	0.3	1"	1“

Specification sheet gives full details of actual model supplied.
The nameplate fitted to the hoist gives the details to identify and gives further information on the hoist.

Notations: The following notations are used throughout this manual.

DANGER	Failure to follow this instruction may result in a dangerous occurrence or fatal injury
CAUTION	Failure to follow this instruction may result in premature wear of the hoist or a component part of the hoist

GETTING STARTED - UNPACKING & SPECIFICATION

1.1 UNPACKING THE HOIST

The hoist will have been packed into a cardboard box, crate or palletised (see weight details in specification).
Handling of all models of hoist & trolley will require lifting equipment and shouldn't be moved by hand.

WHEN UNPACKING:

Ensure that both hoist and any ancillary equipment are recovered from the packaging. Small or delicate items may have been packed separately. Check the contents against the supplier's delivery note and advise the supplier immediately of any shortages.

Ensure that the hoist and ancillary equipment are undamaged. If the goods do not reach you in perfect condition, notify your supplier immediately of any damage. Do not proceed with installation if the goods are damaged. ⚠ **DANGER**

Ensure that a certificate of test and thorough examination together with a 'CE' certificate of conformity is included with the goods. Hand these to the 'responsible person' for safe keeping. Check that the identifying mark (serial no), the safe working load (lifting capacity) and the 'CE' mark appear on the hoist.

SUPPLIER / MANUFACTURER ADDRESS	Red Rooster Lifting Ltd Nauta House, The Meadows Oldmeldrum, Aberdeenshire UK, AB51 0EZ	Red Rooster Lifting Ltd Unit 26 Kelvin Way Trading Estate Kelvin Way, West Bromwich West Midlands, U.K. B70 7TW
TEL NO	01651 872101	0121 525 4162
MODEL	TNC-50TW/4-AT25-2S	
SERIAL NO		
SWL	50 TONNE	
DATE OF PURCHASE		

NAME PLATES
The name plate gives important information which must be retained. Hoist serial number, SWL, model, air pressure, air flow, hoist rating, chain size, speed, year of manufacture and the manufacturers name and address.

ATEX - Explosive protection
In Europe and several parts of the world the use of non-electrical equipment in hazardous areas is covered by the ATEX 2014/34/EU Directive. (Previously ATEX 94/9/EC)

As standard all Red Rooster hoists (except TMM-140) are rated for Zone 2 use (Ex Group II 3 GD Ex h IIA (T4) 135°C

The majority of Red Rooster hoists for use in an ATEX area can be certified for Zone 1 – Ex Group II 2 GD Ex h (IIB or IIC) (T4) 135°C

The following models can also be rated for mining (Ex IM 2) – TCR-500 to TCR-2000/2, TNC and TMH models. These hoists can be used according to Equipment Group I Category M2 where equipment is intended to be de-energised in the event of an explosive atmosphere.

The TCR-250, TCR-500/2, TCS-500 and TCS-980/2 models cannot be rated for mining.

CERTIFICATION
All new hoists are supplied with standard certification: Thorough Examination, EU Declaration of Conformity, which includes ATEX certificate where required. Other documentation is available by agreement.

IN THE EVENT OF ANY PROBLEMS OR SHOULD YOU REQUIRE ASSISTANCE CONTACT THE SUPPLIER AS DETAILED ABOVE QUOTING THE HOIST MODEL AND SERIAL NUMBER.

PACKAGING MATERIALS SHOULD BE RECYCLED OR DISPOSED OF ACCORDING TO LOCAL REGULATIONS.

1.2 OPERATION

Red Rooster pneumatic hoists and trolleys are designed for the lifting, lowering and moving of loads along a runway beam or swing jib within the capacity of the selected hoist model. Our ranges of hoists are all 'CE' marked and conform with the Machinery Directive 2006/42/EC and the powered hoist standard BS EN 14492-2

Our range of hoists and trolleys are available as hook suspension units, trolley mounted, built into low headroom units and cranes. Nearly all hoist models are also available as ATEX ZONE 1 or 2 hoists for use in hazardous areas, with corrosion protection, and can work in temperatures of -10°C to +70°C and down to -20ºC with small modifications. Our air trolley standard operating temperature is -10ºC to +50ºC but with different valves they can work in -20ºC to +60ºC. When used outdoor or offshore hoists should be protected against the weather and examination and maintenance interval should be reduced.

Our hoist and trolleys are extremely robust being developed over many years in the harshest of environments and will require little maintenance if kept lubricated on a regular basis. Noise levels can be found in the technical specification and as motor lubricating oil is supplied through the filter lubricator fitted to the hoist there will be a small amount of oil escaping into the atmosphere through the exhaust air: this can be piped away or collected using an exhaust cleaner. In certain circumstances and temperatures there is a danger of icing of the motor and exhaust silencer. This can be prevented by using an anti-icing lubricant such as Silkair or by fitting a dryer to the air supply to remove moisture from the air supply. Some anti-icing oil may damage air hoses and the o-ring in the hoist valve. ⚠ **CAUTION**

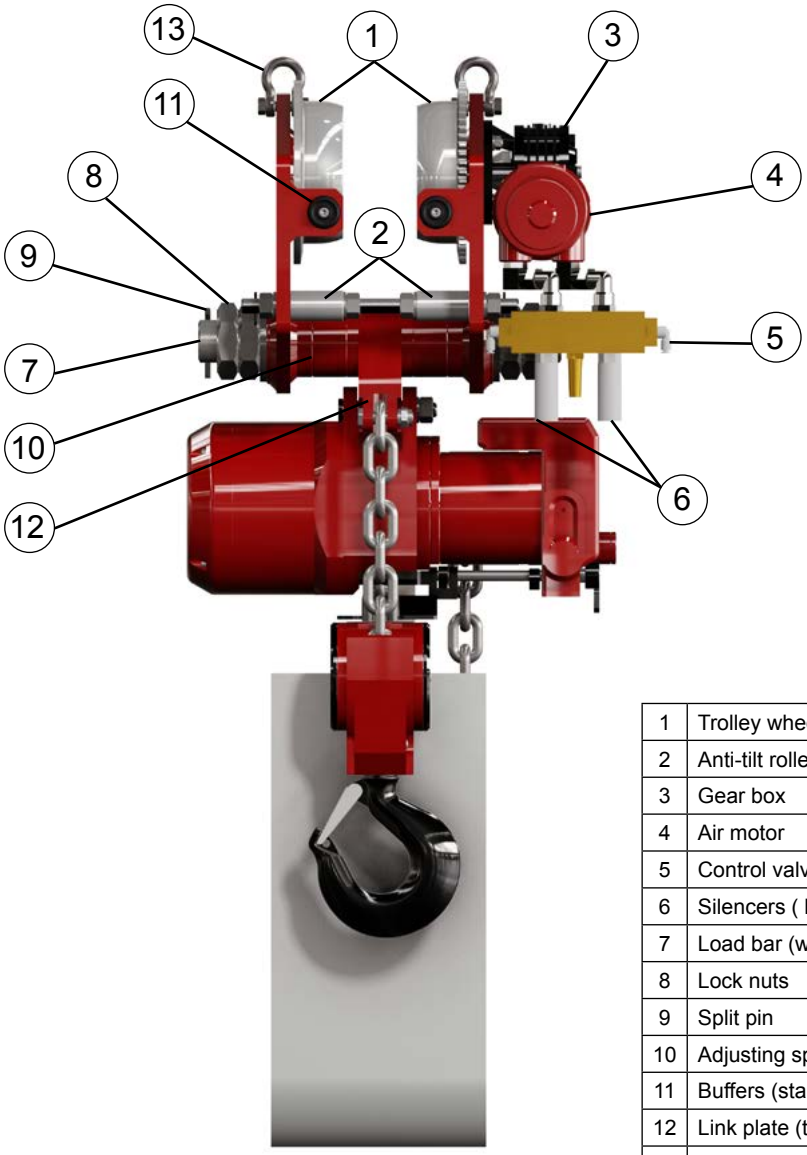

Images for illustration purposes only

1	Trolley wheels with sealed bearings (to suit flat or tapered beams)
2	Anti-tilt rollers (can be set to suit flange)
3	Gear box
4	Air motor
5	Control valve
6	Silencers (low noise levels)
7	Load bar (wide range to suit beam)
8	Lock nuts
9	Split pin
10	Adjusting spacers / washers (for easy adjustment)
11	Buffers (standard on ATEX units)
12	Link plate (to suit all Red Rooster hoists)
13	Lift points in side plates for shackles

1.3 CHECKS BEFORE USE

These checks should be carried out during installation and on a frequent and regular basis thereafter. If the hoist is used daily then it is recommended that they are carried out daily as the checks take only minutes to complete and not only help avoid repair bills but significantly reduce the possibility of an accident or dangerous occurrence. Thoroughly examine the equipment prior to installation to ensure that no damage has occurred during transit. Hoists and trolleys should not be altered in any way without contacting Red Rooster for clearance, as this may affect the certification of the unit.

AIR SUPPLY CHECKS:

- Inlet pressure: 4 to 6 bar (there will be pressure losses across the air set and on long hoses) The supply pressure should not exceed 7 bar as this may affect the load limiter.
- Air flow: Check air flow requirement and minimum hose diameter also check that small bore fittings are not strangling the air flow.
- Keep the lubricator topped up with a light turbine oil (ISOVG3256).
- The filter should be checked regularly and manual units drained of water as required.
- **THE AIR HOSE SHOULD BE SUPPORTED SO THAT THE WEIGHT OF HOSE IS NOT HANGING FROM THE AIR SET AND FITTINGS. THE AIR SET IS NOT DESIGNED TO SUPPORT THE WEIGHT OF THE HOSE. SEE PAGES 7 AND 12 IF A HOSE SUPPORT BRACKET AND MANIFOLD IS FITTED TO THE HOIST.**
- The air supply should be clean and relatively dry. Where the compressor produces a lot of water action should be taken to remove the excess water.
- Check air connection size and type are compatible.
- Check security of air hose connection.

AIR SUPPLY CONNECTION:
Every installation is different, so the correct method of supporting the air hose should be reviewed while installing the hoist. This needs to take into account the weight and size of the hose, obstructions both at deck and hoist level, connections, operating conditions and any likely movement of the hoist and air hose.
The fittings and filter lubricator are not designed to take the weight of the hose.
If the air supply hose length is over 10 metres the hose ID should be increased to the next size.

AIR SUPPLY:
Vane type air motors are designed to function using clean, dry, lubricated air. The installation of an 'in line' air service unit although essential cannot in itself compensate for serious contamination in the air supply. When operating the compressor in moist (humid) or dusty atmospheres seek the advice of your compressor supplier with regard to the fitting of a dryer and filter. ⚠ **CAUTION**

AIR PRESSURE:
The hoist is designed to operate best in the pressure range of 5 to 6 bar (72 to 90 p.s.i). The speeds quoted on the manufacturer's literature are obtainable only at 6 bar (90 p.s.i) inlet pressure. The hoist will operate at much reduced speed at pressures below this figure.

AIR FLOW:

Refer to the hoist data sheet, to select the hose diameter which ensures adequate air flow. Failure to provide adequate airflow will result in a pressure drop in the supply line and cause the hoist to stall and the brake to apply until the pressure increases. In addition, the brake will not release cleanly and will overheat. (Although not in itself a hazard [the brake will fail safe] it may prove frustrating to the operator and a hazard may arise as a consequence.) ⚠ **CAUTION**

HOSE SUPPORT BRACKET:
Where a hose support bracket and manifold have been fitted to the hoist to take the weight of an air supply hose, several checks must be done.

- Check the hose hangs freely and does not interfere with the hoist chain.
- Check the hose is clear of the load to be lifted.
- Check the pendant hose is not obstructed by the air supply hose.
- Check the air hose is supported by the hose clamp / former / festoon system.

⚠ DANGER

- DO use exclusively correctly rated and certified pneumatic hoses and fittings in the air supply line.
- DO support the air line up to the hoist, as the fitting and filter / lubricator are not designed to take a load and may not support the weight of the hose.
- DO maintain the internal diameter (as per the table throughout the supply length) or reduce from the larger diameter to the smaller diameter in the direction of the hoist.
- DON'T use hydraulic fittings. These often have a reduced orifice size resulting in a down line drop in air pressure.
- DON'T increase from smaller to larger diameter or insert a length of smaller diameter hose in the supply line as this will result in reduced flow and pressure.
- DON'T create low points in the air supply line where water may be trapped (or if unavoidable install a drain tap).
- DON'T rely on pneumatic fittings to support airlines; they are not designed for this purpose.
- DON'T shorten the pendant by forming a loop or a coil. This will prevent the strainer wire from supporting the pendant and will cause the hoses to become detached or kinked.

1.4 HOIST ASSEMBLY

Normally our hoist or hoist and trolleys will arrive complete ready to be fitted into position, but sometimes for transportation it may be necessary to disconnect the chain collector, trolley or the pendant control system.

- Chain collectors will be supplied with the necessary bolts and fittings to assemble on site along with any safety slings as shown in section 1.8 and chain collectors in section 7.4.
- Due to the size of some trolleys it is easier to ship split from the hoist, the trolley GA drawings show the load bar and top eye details for refitting and the control and supply air lines are numbered or colour coded for re-connection.
- When lifting into position either use the lifting points on the hoist or hoist and trolley, if the hoist does not have lifting points fitted securely fit slings to the body of the hoist or use the top hook if possible. Do not lift by the controls, valves, or the air set.

⚠ DANGER

MOUNTING THE HOIST

The air hoist is designed as a LIFTING MACHINE and as such is designed exclusively for the lifting loads vertically. Non vertical lifting will result in premature wear of the chain and chain guide and may result in damage to the limit arms or a failure of the limit arms to operate. The trolley is designed to move loads along a runway beam or swing jib. It must be correctly adjusted for the flange width and thickness.

- Site the hoist immediately above the load which is to be lifted.
- Ensure that the point from which the hoist is suspended has been designed and tested to at least the same safe working load as the hoist itself.
- Ensure that the suspension point or shackle fits snugly into the bowl of the hoist top hook and that the safety catch closes to prevent escape.
- Use only certified lifting gear with a SWL in excess of the load to be lifted to connect to the load itself.
- Ensure that the lifting gear fits snugly into the bowl of the hoist bottom hook and that the safety catch closes to prevent escape.
- Ensure that the control length (pendant or cords) is adequate to allow the operator to stand away from the load, in a safe and secure position with the cords or pendant at waist height.

TROLLEY ASSEMBLY

- Thoroughly examine the equipment prior to installation to ensure that no damage has occurred during transit,.
- Check the wheel profile matches the beam.
- Never use a damaged trolley.
- Match the trolley to the SWL of the beam and the type of hoist to be fitted.
- Check the load bar nuts are tight and the link plate in the centre of the load bar.
- Trolleys should be cleaned in a dry clean area.
- Do not side load the trolley.

TROLLEY CHECKS

The contents of this section are designed for the guidance of personnel using push or geared trolleys.

- Ensure that the trolley is set to the correct size for the beam.
- Ensure the runway is fitted with adequate end stops.
- Ensure the runway load path is clear of obstructions.
- Ensure that the trolley tie bars are correctly secured.

1.4 CLOSE HEADROOM WORKING

The lower hook of the TCR / TNC / TCS / TMH hoist includes a swivel arrangement. This allows the load to turn without twisting the chain. However, when repeatedly handling loads with the bottom hook close to the hoist, especially when rotation of the load is prevented, there is tendency for the chain to attempt to enter the guide at an angle. This is particularly pronounced on two fall units. If this problem is noticed when doing a trial lift, a high quality ball bearing swivel should be mounted below the bottom hook of the hoist.

CHAIN COLLECTORS

If the hoist has been supplied with a chain collector bag or bucket, and the chain has been stored within it during shipment, remove all the chain from the collector by hand, and remove any knots or twists.
In all cases carefully feed the chain over the load wheel allowing it to fill the collector without any interference as it emerges from the wheel. This way the collector will fill normally. If the chain within the collector is disturbed great care must be taken the next time that the chain is fed out of the collector to ensure that it is not twisted or knotted. Chain bags and buckets are fitted with one or two brackets depending on the model and HOL of the hoist. ⚠ **DANGER** See additional instructions (Section 6) for large collectors.

1.5 TECHNICAL CHARACTERISTICS

The WLL of the hoist and trolley will be marked on the hoist / trolley name plate and also in the hoist specification supplied.
The reactions on the powered hoist on the support, runway beam or crane should have been taken into account in the design of the structure. The structure should be at least 25% stronger than when using manual equipment due to the shock loading applied by the operational speeds and the starting and stopping of the hoist.

All Red Rooster hoists are fitted with the following safety features

- Overload limiter
- Upper and lower mechanically operated travel limits. These are ultimate stops and should not be used to stop the hoist on a regular basis.
- The disc brake is spring applied so when the controls are not operated or in the event of loss of air supply the brake is applied holding the load in position.
- On pendant controlled hoists an emergency stop button is fitted which connects to a normally open valve either located in the hoist valve chamber or connected to the hoist. When the emergency stop button is pushed or if the air supply to the hoist is cut off then the valve will close stopping the hoist.
- Red Rooster hoists have a 5:1 factor of safety.

1.6 HOIST CHECKS BEFORE USE

HOIST CHECKS (AIR SUPPLY OFF)

- Hook swivels satisfactorily and the safety catches work correctly.
- Load chain is undamaged and lubricated (light mineral oil).
- The load chain is not twisted through (two fall or more models) and that the load chain passed through the limit lever (All models).
- The load chain anchor is sound (both live and slack end).
- Check for damage to the hoist, pendant and control lines.
- Do not operated below -10°C or above 70°C without contacting Red Rooster. (The hoist can be used down to -20ºC with small modifications)

HOIST CHECKS (AIR SUPPLY ON)

- The pendant buttons, levers or cords should be smooth to operate and return to neutral when released (hoist stops and does not run on).
- The hoist is run up and down on a regular basis. Where hoists are hanging in a dry and protected area they should be run weekly, where the hoist is outside and not protected it should be checked, lubricated and run daily.
- The emergency stop button / valve operates immediately.
- Upper and lower limit switches / levers work satisfactorily.
- Load chains run smoothly over the pocket wheel.
- The load chain should be examined periodically for cracks, gouges and wear.
- Chain collectors should be checked for security and chain capacity.
- Check chain runs in and out of the chain collector smoothly.
- For hoists with a long drop of chain or a large chain collector a separate suspension point may be required (see section 1.8).
- Cord control hoists should have the toggles marked for raise and lower.
- On cord controls check the spool valve returns to neutral and the hoist stops when the cord is released. (hoist stops and does not run on).
- Check the silencer is not partially blocked by comparing the running speed without load against the speed in the manual. ⚠ **DANGER**

NEVER RELEASE THE EMERGENCY STOP BUTTON UNTIL IT IS SAFE TO DO SO

Hoist swivels satisfactorily.
Hoist safety claws functional and undamaged.

Safety claw

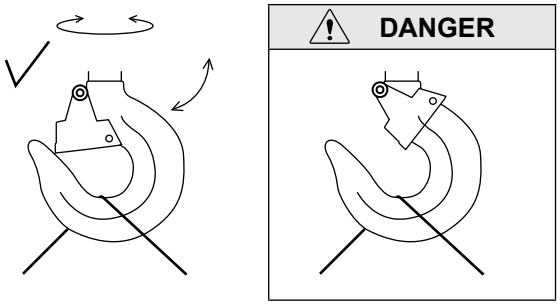

Chain undamaged
Chain not twisted through (two fall models see sketch)

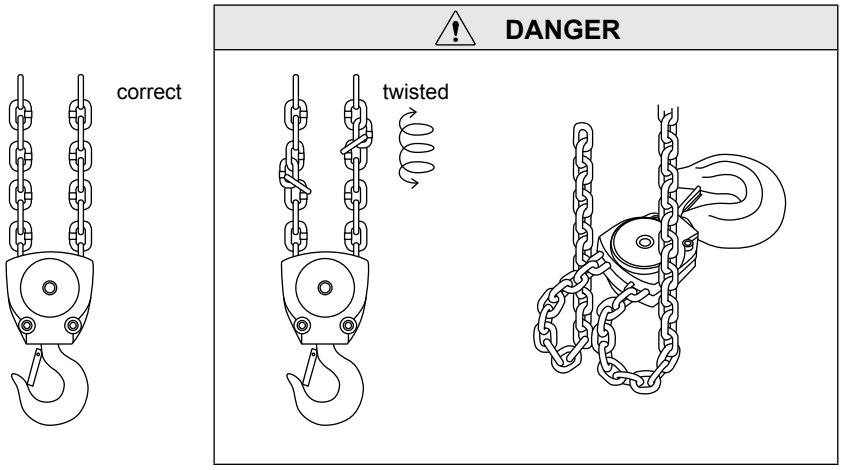

1.7 HOIST CONTROLS

Air hoists can be controlled by either a pull cord or a pendant control operating the spool valve of the hoist operating raise and lower. The diagram at the bottom of this page shows the set up for both types of control and the location on the hoist body.

Cord or pendant hose lengths should be long enough for the operator to stand away from under the load but still with the cord toggles or the pendant suspended at a height of around 1 metre from the operating level. Where the controls have to be to the side of the hoist or where the operator cannot see the load travelling the full range of the lift a banksman should be appointed to assist the operator using a reliable means of communication.

1.8 ADDITIONAL INSTALLATION INSTRUCTIONS

Hook suspension with long chain drops.

Problem:
When a long heavy chain is fitted, and the 'raise' is pressed with the hoist in an unloaded condition, due to the centre line of the hoist having been affected by the weight of chain, the upper limit switch, may fail to operate. In addition, the slack load chain may on some modules foul the limit lever arms, thus preventing it from returning to the centre (neutral position).

Resolution:
A short length of wire rope, 6mm diameter, is fitted to the hoists and bulldog grips have been supplied.
Suspend the hoist in its final location and with as much chain as possible in use. Apply a small load to the hoist and lift it clear of the ground.
Connect the wire rope sling to the support steel alongside the top hook using bulldog grips.
The tension in this sling should be enough to counteract most of the weight of the slack chain produced in the fully raised position, but it must not be tensioned such that it is carrying any of the load supported by the hoist. i.e. if fitted correctly, in an unloaded condition, the sling will be tensioned with the hoist ALMOST in the vertical position. When the load is applied, the tension in the sling will be slack.

Trolley Resolution:
When a hoist and trolley are fitted with heavy chain or a long drop, a second push trolley can be used in the same way to support the weight.

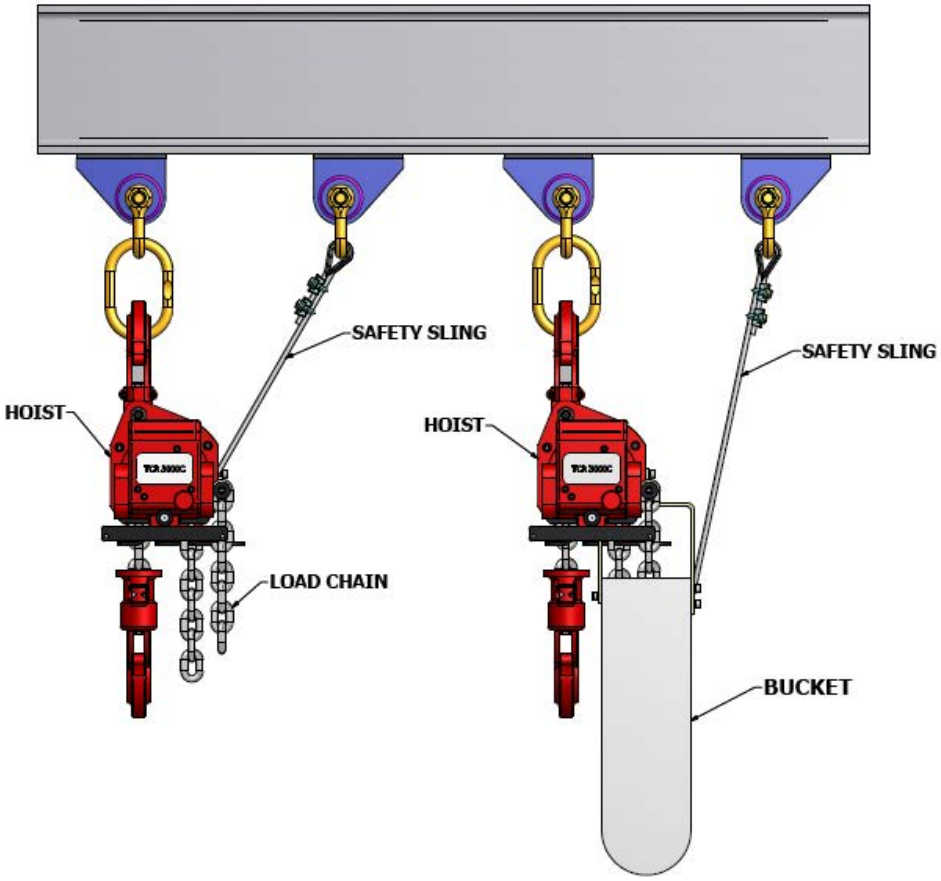

STANDARD HOSE CONNECTION PENDANT CONTROL OR HOIST WITH EXTERNAL EMERGENCY STOP VALVE

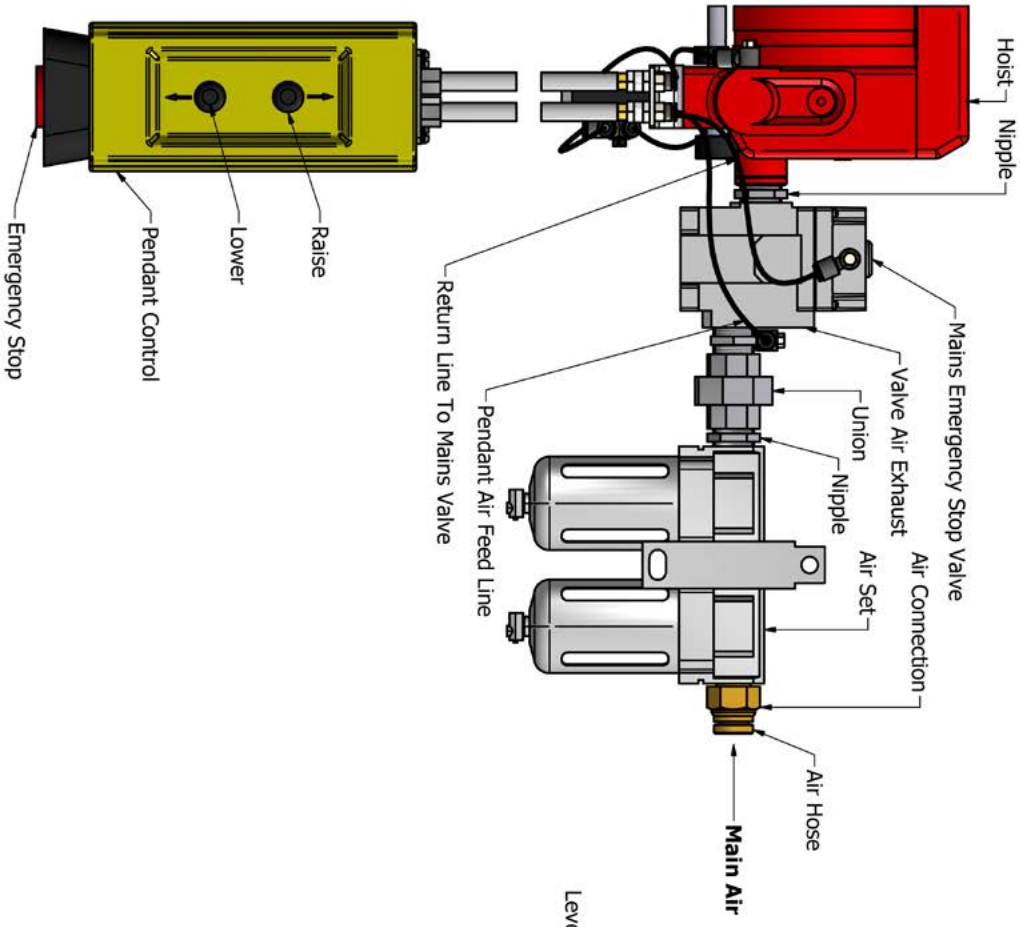

STANDARD HOSE CONNECTION CORD CONTROL OR HOIST WITH INTERNAL EMERGENCY STOP VALVE

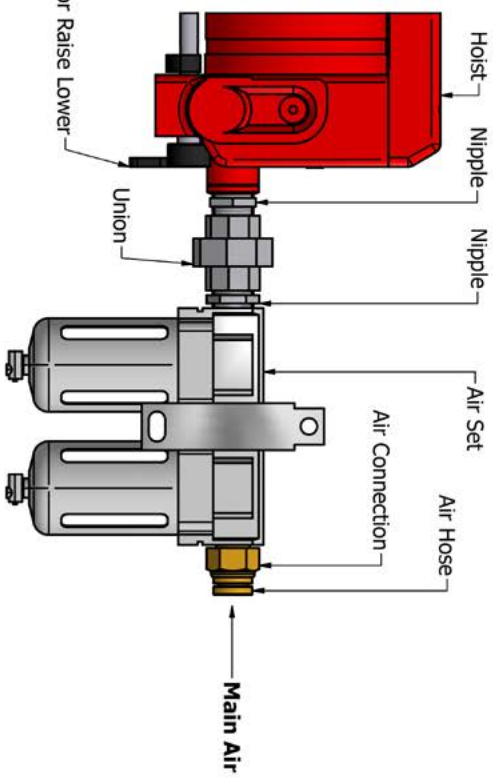

Air Hose Connection with Hose Clamp and Manifold

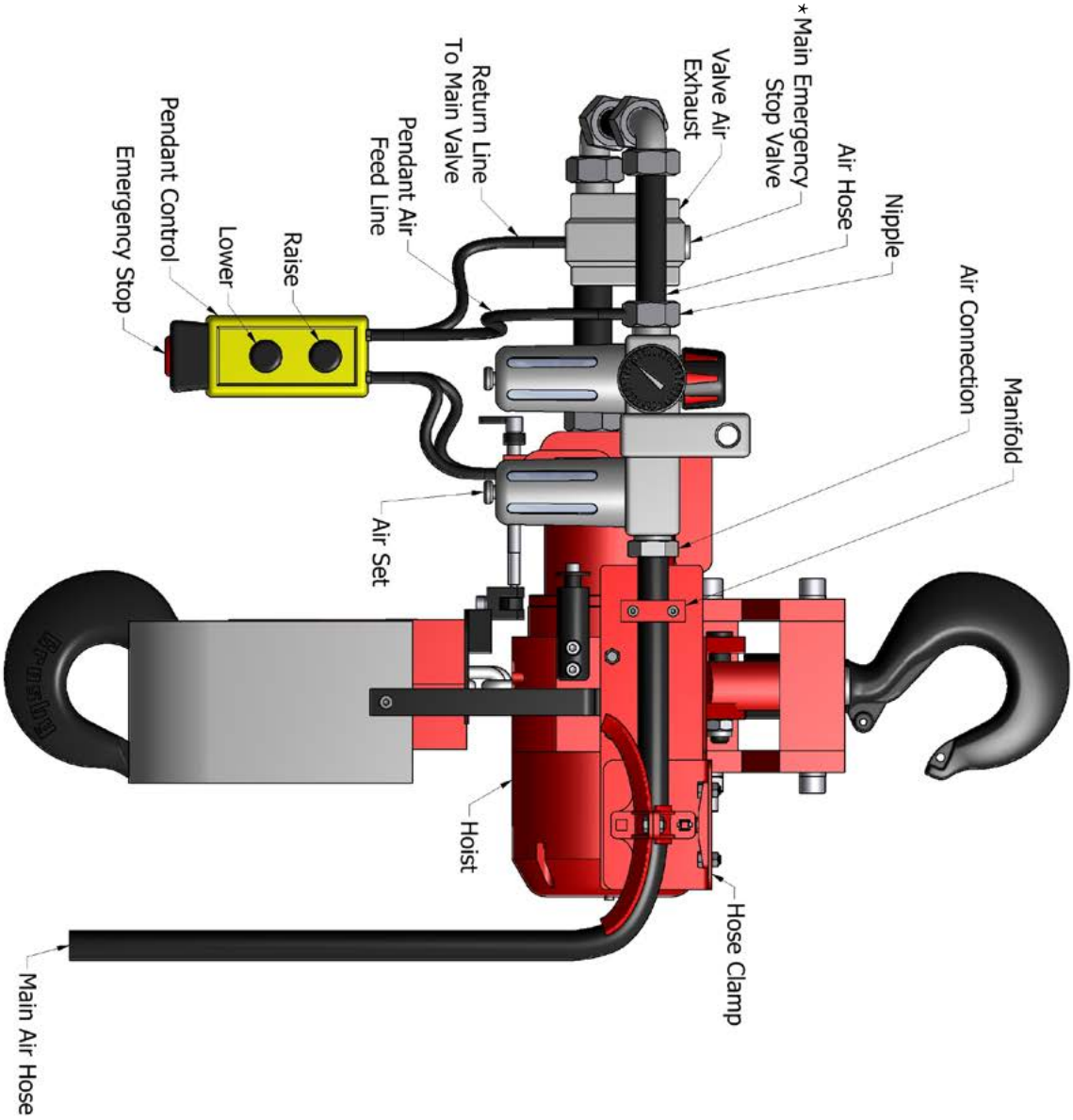

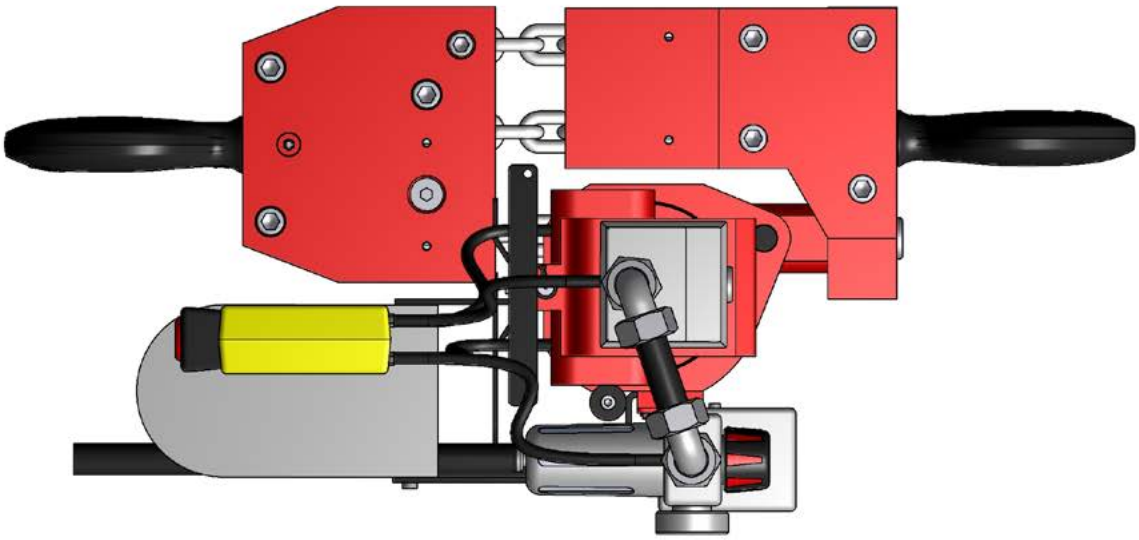

* Some hoists are fitted with internal emergency stop valves
** The hose clamp can also be fitted to the trolley side plate.

GETTING STARTED - INSTALLING THE HOIST & TROLLEY

1.9 RRI trolleys can be plain (non-powered), hand chain (geared) or powered (pneumatic) Hoists can be hook-mounted to the suspension shaft of the trolley, or rigidly mounted to a trolley hanger bracket.

This trolley has been designed for horizontally transporting loads by hand, through manual or pneumatic hoists under normal atmospheric conditions of the work place.

In order to ensure the maximum performance and life from this pnuematic trolley it is essential that the following points are strictly observed.

- The trolley air motor may be operated in any attitude provided adequate lubrication is supplied.
  Being totally enclosed they can be used in any environment within the temperature limits of -10ºC to +50ºC.
  (optional parts -20ºC to +60ºC)
- The maximum working pressure for the air motor is 7 bar (100psi)
- Be sure to adjust the anti-tilt tollers to the highest position possible in the slot to leave the minimum clearance between the underside of the beam and the top of the roller.
- Axial loads should be kept to a minimum.
- Care should be taken when fitting drive components to the shaft, that excessive force is **not used**.
  This will upset the rotor alignment which has been kept to a minimum in order to give high motor performance.
- Check the drive pinion / geared wheels are greased.

OPERATION

Plain Trolley	The trolley movement is controlled by pushing the load or the hook of the attached hoist.
Geared Trolley	Face the hand wheel side of the trolley. To move left, pull hand chain clockwise. To move right, pull hand chain counterclockwise,
Pneumatic Trolley	The trolley directionis controlled by the pendant buttons or levers. Face the trolley motor side plate and use the white or black arrows to control the pendant. The emergency stop buttons stops the trolley.

Trolleys are either delivered assembled for the beam size advised, or assembling but require to be adjusted to the correct beam size.

The lifting points at the top of the trolley above the gearbox should be used for lifting the hoist and trolley into place. Care must be taken not to allow the unit to swing, as the gearbox flange can be damaged and broken if it is allowed to impact against steelwork etc. If contact is made, the flange should be inspected and removed from service for repair.

MOUNTING

Make certain the hoist is properly installed. A little extra time and effort in doing so can contribute a lot toward preventing accidents or injuries and will help achieve the best service possible.

When installing a trolley on a beam, measure the beam flange width and temporarily install the trolley to determine the exact distribution and arrangement of the spacers.

HOOK MOUNTED HOIST

After final trolley installation place hook over suspension shaft or eye. Make sure hook latch is engaged.

If the hoist is suspended by a top hook, the trolley suspension shaft should rest completely within the saddle of the hook and be centred directly between the side plates.

RIGID / EYE MOUNTED HOIST

Mount hoist to trolley and temporarily install on beam to determine exact distribution of spacers to centre the top eye.

After installation, operate trolley over entire length of beam with a capacity load suspended 10 to 15cm off the floor.

1.9 FITTING TROLLEYS IN LOCATION

MOUNTING FROM THE RAIL END

Air trolleys can either be fitted to the runway beam or swing jib in two ways.

1) By removing the end stop from the beam and sliding the trolley which is already set for the flange size on to the beam and then re-fitting the end stop.

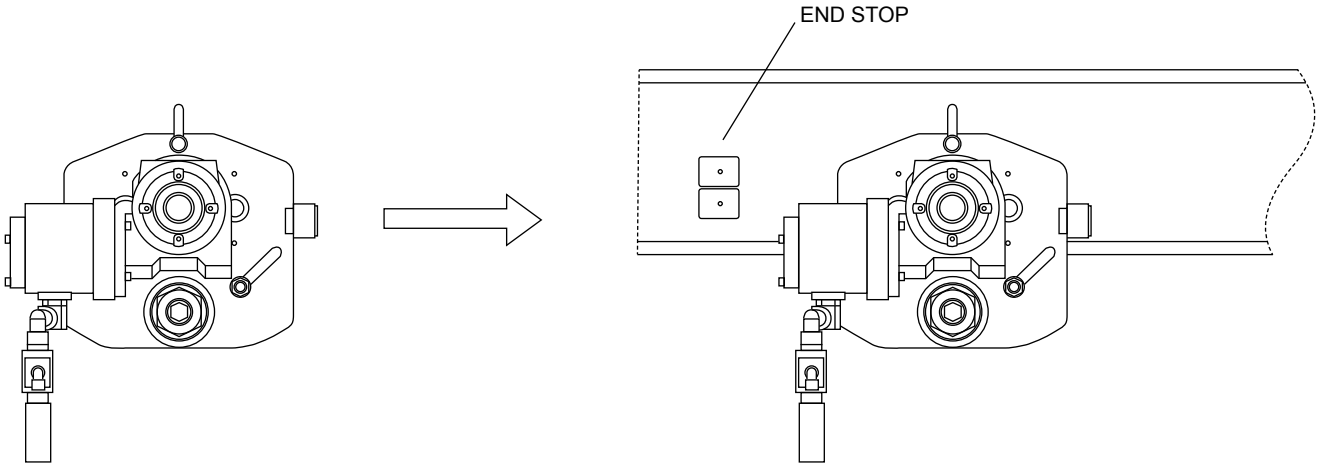

MOUNTING BY DISASSEMBLING THE MAIN TROLLEY BODY

2) By opening the trolley up so that the inner part of the wheels will pass over the beam flange and then sliding the trolley side plates back along the shaft, refitting the spacers, washers and nuts and then tighten up the nuts and check the wheel setting. Be sure to firmly support the parts during reassembly from the bottom side so that the sideplates are not twisted or otherwise shifted. On completion of reassembly, be sure to confirm that various shafts, nuts, lock pins and split pins are properly fastened without any slack and have not been loosened.

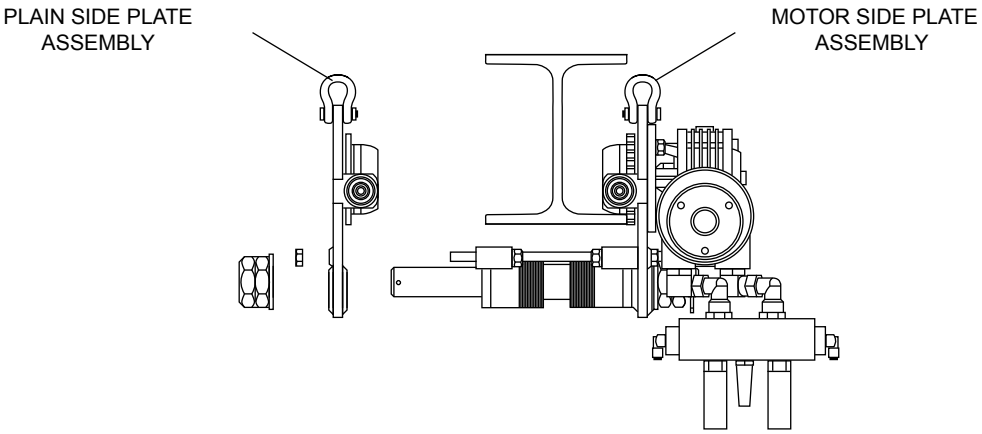

GETTING STARTED - INSTALLING THE HOIST & TROLLEY

1.9

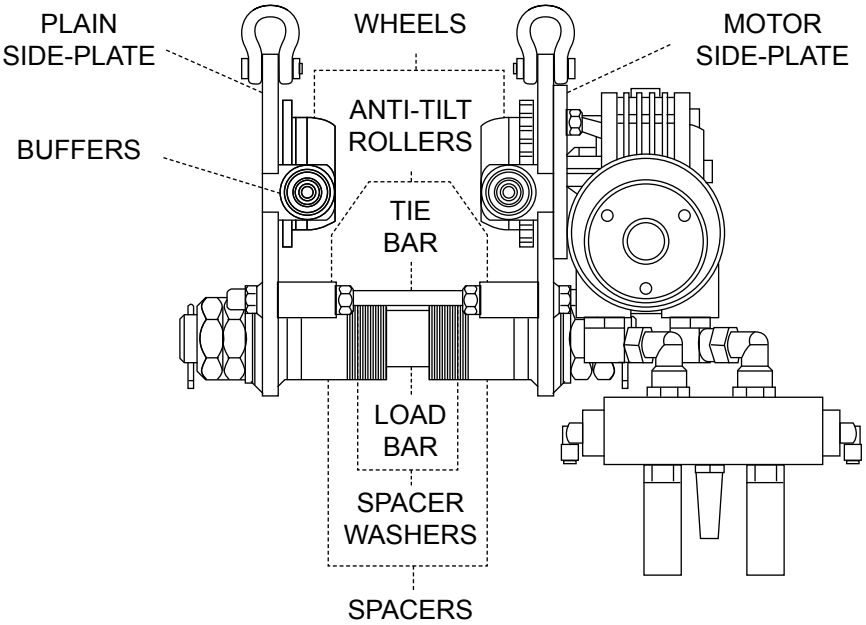

SETTING THE TROLLEY (up to 3 tonne)

1) Slide the hook receiving part or link plate near the suspended shaft centre and grease the shaft.
2) Distribute the spacer rings and adjusting collars equally to either side of the link plate, in order to obtain the dimensions between the wheels, corresponding to the beam width plus 2 or 3mm.
3) Distribute on each side of the side plates, washers and adjusting collars that are remaining and screw a nut on each extremity.
4) Tighten the nuts and lock nuts on the load bar and check the clearance between the beam flange and the wheel flange.
5) Position the tie-rods, anti-tilt rollers, washers and nuts into the slots in each of the side plates. Set to give the minimum amount of clearance betweeen the underside of the beam and the top of the anti-tilt roller. Then tighten the nut against the roller and side plate and re-check the wheel setting.

SETTING THE TROLLEY (over 3 tonne)

1) For trolleys with capacities greater than 3 tonnes, verify that the dimension between the wheel flanges is correct (beam width plus 3 or 4mm), if not adjust the number of washers and spacers between the side plates to obtain the required dimension, by distributing the spacers and washers equally to each side of the link.
2) Loosen the suspended shaft nuts and the connecting tie rod nuts, to separate the side plates enough to be able to put the trolley onto the beam.
3) Tighten the nuts and lock nuts on the load bar and check the clearance between the beam flange and the wheel flange.
4) Position the anti-tilt rollers, tie rods and nuts in the slots provided in the side plate to give the minimum clearance between the underside of the beam and the trolley wheel. Then tighten the nuts against the roller on the inside of the trolley side plate, making sure that the side plates are not bent. When this is done re-check the wheel setting.

GETTING STARTED - INSTALLING THE HOIST & TROLLEY

1.9

⚠ DANGER

TROLLEY CHECKS

- Ensure the runway beam is fitted with adequate end stops which strike the buffer/anti-drop plate on the trolley.
- Ensure the runway load path is clear of obstructions, flat and in good condition.
- Ensure the teeth from the pinion fit correctly into the rack on the beam (if fitted)
- The air supply hose should not be suspended from the hoist without support. Where feasible, a taut wire or a festoon system should be fitted to allow the hose to run along the bea, without loading the air set or fittings.
- The hoist connection plate should be in the centre of the load bar with an equal amount of spacers each side.
- When a trolley has been opened/split for adjusting or fitting, the load bar and tie bar nut should be retightened.
- The trolley side plates should be parallel to the beam flange when the nuts are tight .
- Do not use the beam end stops to stop the trolley on a regular basis. It is a safety measure.

⚠ DANGER **⚠ CAUTION**

DO	use exclusively correctly rated pneumatic hoses and fittings in the air supply line.
DO	maintain the internal diameter (as per the table throughout the supply length) or reduce from the larger diameter to the smaller diameter in the direction of the hoist.
DO	support the airline up to the hoist, as the fittings and filter/lubricator are not designed to take a load and may not support the weight of the hose.
DON'T	use hydraulic fittings as these tend to have a reduced orifice size resulting in a down line drop in air pressure.
DON'T	increase from smaller to larger diameter or insert a length of smaller diameter hose in the supply line as this will result in reduced flow and pressure.
DON'T	create low points in the air supply line where water may be trapped (or if unavoidable install a drain tap)
DON'T	shorten the pendant by forming a loop or coil. This will prevent the strainer wire from supporting the pendant and will cause the hoses to become detached or kinked.
DON'T	allow the air hose to hang from the air set. Neither the air set or fittings are designed to take the weight of the hose.

OPERATION - LOW HEADROOM & ULTRA LOW HEADROOM TROLLEY

1.9

- The LHR and ULHR trolley should only be used on straight runway beams. Special units are available for curved beams designed to suit the radius.
- LHR and ULHR trolleys are usually designed for a set beam size but can be made adjustable if required.
- LHR and ULHR units are available as standard or ATEX versions and with our in-house design team special units can be manufactured to suit your requirements.
- LHR units are also available as articulated units or with rack and pinion drive or beam brake.

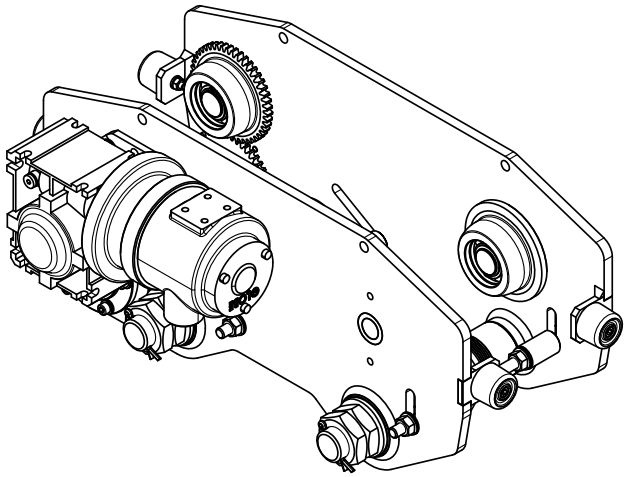

ASSEMBLY AND INSTALLATION - RACK & PINION TROLLEY

1.10

- The fitting of a rack and pinion trolleys is very similar to a standard air trolley with the addition of the pinion adjustment to mesh with the rack on the runway beam or swing jib.
- The four bolts on the driven and non-driven adjusting plates should be slackened to allow the plates to drop down to the maximum rack clearance.
- Fit the trolley on to the beam as per the standard instructions.
- Push the adjusting plates up so that the pinion meshes with the rack on the beam, the lower down by 1 to 1.5mm.
- Slightly tighten the four bolts on both adjusting plates.
- Check the pinion shaft is parallel with the beam flange and adjust if necessary.
- Tighten up the eight bolts
- Check the clearance has not changed between the pinion and the rack.
- Function test with a load.
- Re-check the security of all nuts and bolts on the trolley.

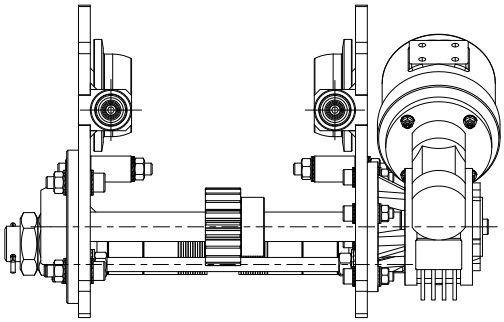

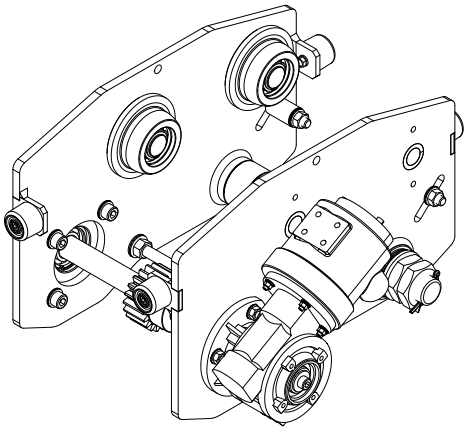

ASSEMBLY AND INSTALLATION - BEAM BRAKE TROLLEY

(See standard trolley installation instructions)

Air and geared trolleys fitted fitted with a beam brakes are manufactured to fit only the size of beam flange they are designed for. If they have to be moved to another beam then a new beam brake shaft would be required.
Trolleys can either be air powered or gear travel and are based on a standard trolley fitted with blocks or pads to lock the trolley in location when the chain wheel is turned. The chain is then turned the other way to release the trolley.

Fitting of a trolley with a beam brake should be done from the end of the beam with the end stops removed for fitting. It can be difficult to open up the trolley to fit over the beam and then close up again while suspended.

Check operation of beam brake when locked in position. Close beam brake and then try pulling the geared drive chain checking that the trolley does not move.

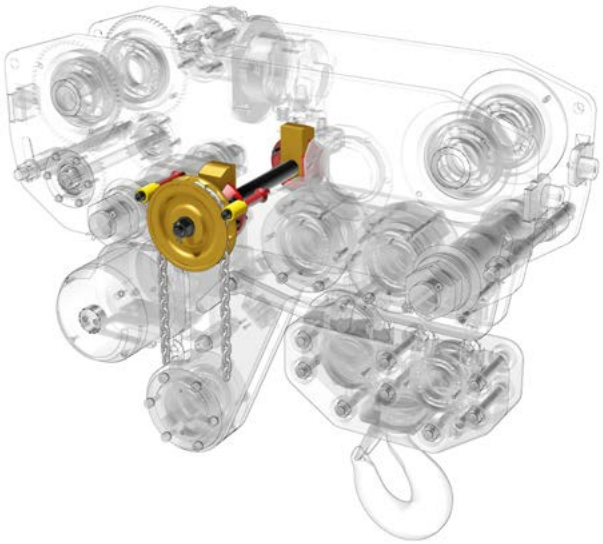

ASSEMBLY AND INSTALLATION - LHR, ULHR & ARTICULATED TROLLEY

1.10

- The fitting of an articulated trolley will depend on the design of the power transfer between the trolley drive wheels. This can either be with a motor gearbox at one side with a transfer shaft across to the geared wheel on the plain side plate or the trolley can have a motor gearbox on both side plates to drive the trolley.
- The fitting of the trolley on to the beam can either be from the end of the beam or the trolley can be opened up to fit over the beam flange.

MOUNTING FROM THE END OF THE RUNWAY BEAM

- Check the trolley wheel setting against the runway beam flange size (the setting should be as per the standard trolley setting)
- Remove the runway beam end stop and slide the assembled trolley on to the runway beam past the position for the end stop and then re-fit the end stop
- Check the wheel setting and connect the air supply then function check the trolley without load along the straight and curved sections of the runway beam.
- If the trolley runs along the working area without problem lift the SWL for the hoist and trolley and travel along the runway beam checking for any problems travelling around the curves and over joints.

MOUNTING BY DISMANTLING THE MAIN TROLLEY BODY (TRANSFER SHAFT) - CAUTION

- If the trolley is fitted with a transfer shaft and the load bars are made for a set size, several parts such as the transfer shaft, gears, and bolts will have to be removed at ground level when opening the trolley and then refitted when the trolley side plates are positioned at either side of the runway beam.
- Position one or two hoists at either side of the runway beam, connect the bottom hooks the lifting points on the trolley side plates and lift the trolley side plates up to a position where the trolley wheels are level with the beam flange.
- While holding the transfer shaft and load bars in position close the plain side plate on to the beam lining up the transfer shaft gears and load bars. Check the security of the shafts, load bars and tie bars.
- Carry out checks and function tests as per item 1

MOUNTING BY DISMANTLING THE MAIN TROLLEY BODY (DUAL MOTORS)

- Where dual air motor are mounted on two trolley side plates this allows for the trolleys to be easily opened up at ground level, lifted up and then closed on to the beam flange.
- Check trolley flange setting matches the runway beam flange
- Position the hoist and trolley under the beam where the hoists is to be installed
- Position two or four hoists above the runway beam and connect the bottom hooks to the lifting points on the trolley side plates.
- Slacken the load bar and tie bar nuts so that the side plates can slide apart, then check the opening between the inside of wheels is wide enough to go past the beam flange.
- Keeping the trolley level lift the trolley wheels up to the level of the beam flange.
- Next push the trolley side plates together, then tighten the nuts on the load bar and tie bars, check all parts are secure.
- Check the trolley wheel setting on the beam (as per standard trolley) and then connect the air supply and function test the trolley without load along the full length of the curved and straight sections of the runway beam.
- Next with the SWL of the hoist and trolley run the trolley along the runway beam checking movement around any curved sections and over joints.

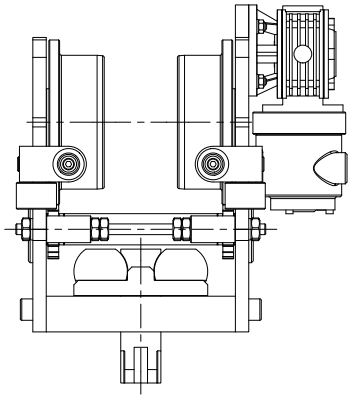

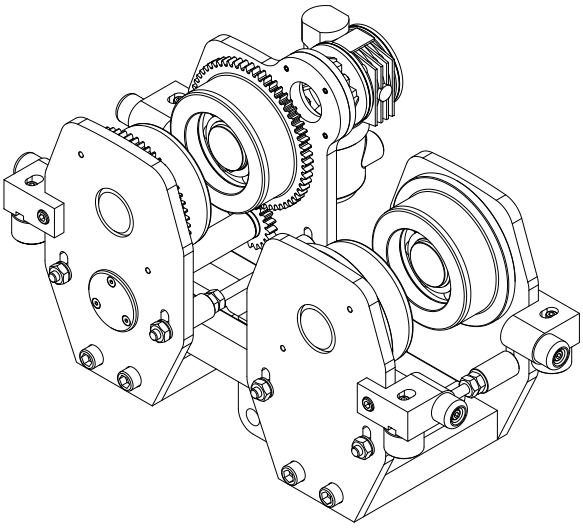

LUBRICATION

2.1

Item	Oil Type	Frequency
Lubricator Unit Main Air Supply	Atlub Medium to light turbine oil ISO VG 32-56 Or any quality airline lubricant (See note 1)	10 to 15 drops per minute Do not allow lubricator to run out of oil
Load Chain	Normal industrial - any light mineral oil Clean areas - wax based, semi setting Food industry - suitable vegetable oil (See note 2)	Weekly / monthly subject to environment / use
Limit Lever Linkages and Anchor pins	No. 2 grease	Monthly or more frequently in aggressive environments
Gearbox (Hoist)	High temperature EP2 grease	Only at major overhaul
Gearbox (Trolley)	Grade VG220	Only at major overhaul
Trolley Drive Pinion	No. 2 Grease	Monthly or more frequently in aggressive environments

Note 1
In all cases oil will be expelled from the hoist and trolley exhaust. The amount discharged is proportional to the delivery rate of the lubricator. In environments where oil in the exhaust cannot be tolerated, the exhaust can be piped away to a safe area, but this requires specialist modification of the hoist (See air service equipment) - CONSULT YOUR DEALER. ⚠ **CAUTION**

Note 2
All Red Rooster hoist chain must be lubricated to prevent wear. ⚠ **DANGER**
Keeping load chain clean and lubricated will greatly increase the lifetime of the chain and prevent costly replacement. Very little lubricant is needed and can be easily applied to the chain by cloth, brush or spray.

Note 3
Geared wheels (air + geared trolley only) - Lubricate exposed trollley drive pinion and wheel teeth. Brush with grease as often as necessary to keep teeth liberally covered. If the grease becomes contaminated with sand, dirt or other worn materials, remove old greases and replace with new grease (standard grease) during monthly or annual inspection. Temperature range of standard grease is -10ºC to +50ºC. If the trolley is used at temperature below -10ºC or above +50ºC, consult Red Rooster since come parts shall be changed.

Note 4
Trolley wheel bearings do not need to be lubricated and must be replaced if worn or damaged. Hand chain, used on geared trolleys, does not normally require lubrication.

In areas of high corrosion, plated chain can be used along with special lubricants to prevent corrosion from sea water and spray. Chains used in these areas should be re-lubricated on a regular basis.

NEVER use heavy grease or bitumen based products to lubricate the chain as these will foul the chain guide, idler and load wheels and bearings. ⚠ **DANGER**

Remove dust and water drops on the Load Chain and then apply lubricant. Application of lubrication influences on the life of the Load Chain considerably. Apply the lubricant sufficiently.

AIR SUPPLY FILTER, REGULATOR AND LUBRICATOR

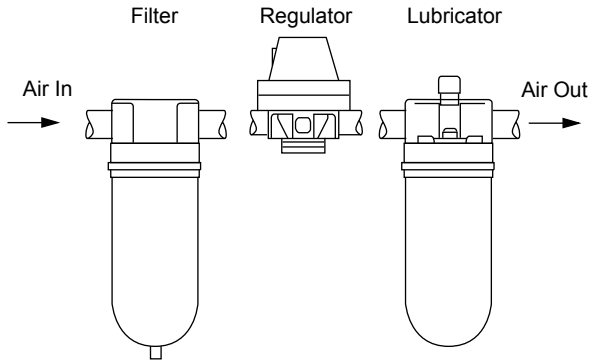

LOAD CHAIN LUBRICATION

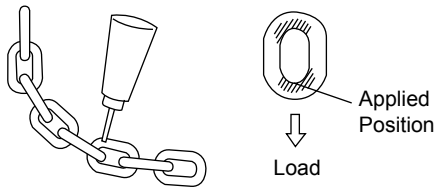

SAFE OPERATION - AIR HOIST & TROLLEY

3.1 The contents of this section are designed for the guidance of personnel using the hoist. For the most part, they are 'common sense' procedures. Most dangerous occurrences involving lifting machines are not as a result of defect developing in the machine itself but are as a result of an error or act of carelessness by the operator. As such, the vast majority of accidents or dangerous occurrences are avoidable. The operator is responsible for his safety and the safety of others in the area of the hoist.

It is further recommended that only authorised personnel should be permitted to use the hoist and that all staff should be properly trained and have adequate knowledge in both safe use and visual examination.

ALWAYS - follow company procedures, work safely, report faults and comply with regulations.

Operating in cold weather can effect both the equipment and the operator. Fluids do not flow, so allow time to warm up the hoist and trolley. Operators wear increased clothing so vision, hearing and touch could be impaired. ⚠ **DANGER** ⚠ **CAUTION**

⚠ DANGER

GUIDELINES FOR PERSONNEL USING AIR HOIST - ALWAYS:

- Read the instruction manual before use.
- Test run the equipment prior to application of a load and ensure that the equipment, including its control and safety devices are functioning correctly.
- Do not touch the hoist body immediately after extensive use, as it may be hot or very cold.
- Do not wear loose clothing (ties, scarves etc.) which may get dragged into the hoist or bottom block.
- Wear safety boots or shoes (together with a safety helmet if lifting overhead).
- Ensure that a positively engaged isolator requiring an appropriate operation to re-engage, is fitted between the air supply and the machine (lever, button or quarter turn valve). The isolator should isolate only the machine itself or where the safety of other machines may be affected by isolation of the machine, all machines affected must be isolated at the same time.
- Large hoists and trolleys have lifting eyes that can be used for handling and installation. Where no lifting eyes are fitted, a sling may be fitted round the hoist body using a choker hitch.
- Ensure that the load is securely supported by certified lifting gear (slings and shackles) with a higher safe working load in the configuration used, than the load to be lifted and that it cannot 'escape' whilst being lifted.
- Stand clear of the load when lifting or lowering and ensure that the point at which you are standing is secure. Do not touch moving chain.
- When there is a brief pause in the lifting operation where the operator lets go of the pendant control, he must stay in the area and make sure the pendant hangs vertically and cannot swing or get blown against anything.
- When there is a longer break in the lifting operation and the load has been landed, then the emergency stop button should be actuated so that a positive action is required before the hoist or hoist and trolley can be operated.
- If the hook is still attached to an item then a sign should be attached to the pendant and depending on the circumstances the power supply locked off.
- Ensure that other personnel cannot enter the immediate area where the lift is taking place.
- Never lift the load higher than necessary.
- Ensure that the control length (cord or pendant) is adequate to allow the operator to stand away from the load in a position to see the load at all stages of lift.
- The pendant should hang from the hoist and not be placed onto objects where the controls could be activated.
- If it is not possible to site yourself in a position where you can see the load at all stages, appoint a 'banksman' to cover the area which you cannot see and establish a reliable method of communication (verbal or hand signals) before starting the lift.
- If you suspect that the equipment is defective or is developing a fault, stop the lifting operation immediately.
- In the event of an emergency make the area safe by returning the load to a rest position, but if this is not possible the area should be cordoned off and the advice of your superior or safety officer sought. Never repair a hoist with the load suspended.
- If it is not possible to lower a load to the ground to make it safe, then a lifting plan must be in place to recover the load or make it safe in case of hoist failure.
- In the case of complex lifting operations a lifting plan must be in place to control the lift stipulating the hoists to be used, operating conditions, operator instructions and the different parts of the lift taking part in the agreed sequence. Carry out a practice lift with a small load if necessary to confirm the lifting operation.
- The starting and stopping of the hoist and taking up of slack chain at high speed can apply high forces which could be higher than the load being lifted. Always operate hoists smoothly and in a controlled manner.
- The attachment points must be capable of withstanding the expected forces.
- External vibration can affect the hoist and can cause damage and wear.
- Do not use the hoist outside in high winds, bad weather conditions, or when temperatures are likely to be outside the operating temperature of the hoist.
- Only use the hoist to make a lift safe when a warning alarm has been activated in the area and then isolate the hoist.
- With trolleys less than 5 tonne SWL the weight of the hose may cause side loading of the trolley and could cause the wheels to come off the beam so the hose should be supported at the beam height to prevent loading the trolley, air set or fittings.

AT ALL TIMES THINK BEFORE YOU ACT - PLAN EVERY LIFT

SAFE OPERATION - HOIST OPERATORS

⚠ DANGER

3.1

- Hoist operators must be healthy with satisfactory eyesight and not under the influence of alcohol, drugs or medication when operating the hoist.
- Hoist operators should be trained in the operation of hoists proper rigging procedures for the attachment of loads to the hoist.
- The operator is always responsible for his own safety and anybody else in the operating area.
- Always start the lowering or lifting movement slowly and smoothly.
- When using the hoist jointly with another person, use signals agreed upon at the job site (standardized signals).
- When using the hoist without chain collector, avoid the slack chain to fall, catch or impact as this can cause hazards.
- In case of air pressure loss, secure the load and area. Ensure that turning the air supply back on cannot result in a dangerous occurence.
- Stop using the hoist in case of abnormal sounds.

SAFE OPERATION - FORESEEABLE INCORRECT USE

⚠ DANGER **⚠ CAUTION**

3.1

- Supporting structures used with this trolley must meet or exceed the design safety factor to handle the rated load, plus the weight of the hoist and attached equipment. This is the customers responsibility. If in doubt, consult a registered engineer
- Where the supporting steel work transfers a vibration or oscillation through the hoist this can cause increased wear between the links of the load chain.
- Where the hoist or hoist and trolleys are fitted with lifting points they should only be used for lifting the hoist and trolley, they are not designed to take the full WLL of the hoist.
- Before carrying out any work on the hoist or trolley the main air should be turned off and the residual are vented or the hoist run to dissipate the air pressure.
- Do not exceed the stated SWL or duty rating. (Fig. A)
- Operate the hoist smoothly. Do not suddenly change direction as this may exert both shock loads acceleration forces may well in excess of the weight of the load being lifted.
- Do not use the hoist to lift / lower / transport personnel. (Fig. B)
- Only use the hoist to lift a load vertically. It is not designed to pull or drag loads without modification and or a lift plan being used for special lifting operations, such as cross hauling. (Fig. C)
- Ensure that the load is securely supported by its lifting gear (slings shackles etc.) and that it cannot escape whilst being lifted.
- Ensure that the lifting assembly (slings, shackles etc.) has a higher safe working load in the configuration used than the load to be lifted.
- Ensure that the point at which the hoist is to be suspended has an equal or greater safe working load than the hoist.
- Ensure that the load is free to move and will clear all obstructions.
- Avoid swinging the load or hook.
- Do not use the hoist if the chain is damaged, twisted, kinked or worn.
- Ensure that the load is stable and in balance at starting lifting or setting down as tilting or falling loads can cause accidents.
- Never allow loads to “fall” into the load chain, causing shockloading. (Fig. D)
- Never lock the control elements of the pendant or controls.
- Never use the chain, hooks or hoist as an electrical ground for welding or electricity.
- Do not use the limits as a means of stopping the hoist (these are safety devices).
- Do not use controls as a means of moving the hoist (the pendant is designed to support its own self weight only).
- Stand clear of the load when lifting and lowering and ensure that the point at which you are standing is safe and secure. (Fig. E)
- Do not hold onto the load chain when controlling a load (fit a tag to the load if necessary to ensure that the load is controlled).
- Do not apply a load to the tip of the Bottom Hook or the Hook Latch. (Fig. F)
- Do not bind a load with the load chain directly. (Fig. G)
- Do not operate the Load Chain while it is in contact with any sharp edges. (Fig. H)

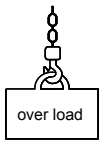

Fig. A

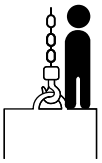

Fig. B

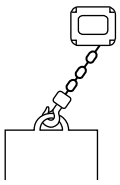

Fig. C

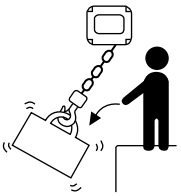

Fig. D

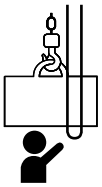

Fig. E

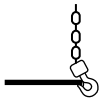

Fig. F

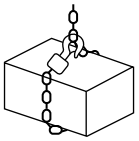

Fig. G

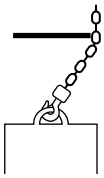

Fig. H

SAFE OPERATION

⚠ DANGER

3.2 SAFETY EQUIPMENT - PPE

Safe systems of work should be appropriate for the working conditions that the hoist is being used in with method statements stating what the hoist is being used for, the authorisation of staff to operate hoists and the PPE requirements in place. In general overalls, safety shoes, hearing protection and gloves are normal but other sites will require safety glasses and hard hats.

⚠ DANGER

3.3 LIFTING GEAR BELOW THE HOIST

Where lifting gear is connected into the bottom hook of the hoist it should be sized for at least the capacity of the hoist and physically fit well into the body of the hook allowing the safety catch to close.

Where a larger item such as a spreader beam is used this may have an effect on the lifting capacity of the hoist, so the SWL should be reduced to reflect this.

HOW TO SLING THE LOAD PROPERLY

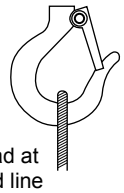

Sling the load at the extended line of the hook shaft

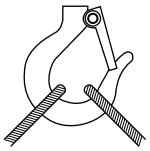

120º or less

DO NOT CARRY OUT DANGEROUS HOOKING AS SHOWN BELOW

Improper hooking position of the lifted load or the sling

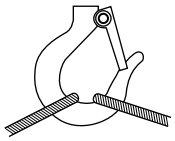

Angle exceeding 120º
Angle too wide

Unable closing of the hook latch

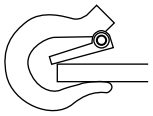

Hooking of the load at the tip of the hook

⚠ DANGER

3.4 OPERATIONAL BREAKDOWN OR ACCIDENT

If an unloaded hoist stops working then it should be removed from location and sent for repair if none of the remedies in the trouble shooting guide have an effect.

When the hoist is still holding a load then an additional hoist should be used to take the weight of the load so it can be safely lowered and the faulty hoist removed for repair. If another hoist cannot be used to lower the load it is possible to release the brake by slackening the brake cover screws but this should only be done by a RRIUK engineer or after discussions with Red Rooster as it is not always possible or safe to do so.

The main air supply line to the hoist should be fitted with an easily accessible valve to cut off the air supply to the hoist in case of emergency or for maintenance. Pendant control hoists also have a main air shut off valve.

There should be a safe access to the hoist to carry out maintenance, inspection and lubrication.

MAINTENANCE

4.1 The TCR + TNC range of hoists are heavy duty pneumatic hoists and built to require little maintenance if they are kept lubricated and maintained. The maintenance required will depend on daily operating times, the conditions, quality of the air supply and the percentage of the WLL regularly being lifted. The operators daily checks and the monthly maintenance checks are necessary to check the condition of the hoist. Maintenance work should be carried out by trained and qualified personnel. ⚠ **DANGER**

It is recommended that in the case of the TCR, TCS & TNC hoist and air trolleys inspections are carried out in accordance with the following schedule, although the frequency of the 'six month inspection' should be increased in high risk environments, aggressive environments or where the usage is particularly heavy to between one and three months. ⚠ **CAUTION**

EVERY DAY / WEEK (DEPENDING ON USAGE) ⚠ **CAUTION**

The items listed under 'checks before use' in Section 1 (Getting Started) of the manual should be examined.
It is recommended that the lubricator is 'topped up' as a part of this inspection routine.

AT LEAST ONCE PER MONTH FOR HOISTS IN CONSTANT USE OR EVERY THREE MONTHS LIGHTLY USED UNITS

⚠ DANGER

LOAD CHAIN - Thoroughly examine throughout its length for wear in the links, corrosion, cracks or distortion. If the wear in the links exceeds that stated in the chart, the chain should be replaced. If there are any visible cracks or distortion the chain should be replaced. Any wear should be measured and checked against section 4.8.

BRAKE - With a load applied check the brake efficiency. If there is any delay in actuation or slippage, the brake is defective and the hoist must be thoroughly overhauled before being returned to service.

HOOKS, SWIVELS AND CLAWS - Examine hooks for wear, deformation (refer to chart), nicks and gouges. Ensure that the hooks swivel smoothly and that the safety claw opens fully and closes under spring tension.

CHAIN ANCHOR PIN - Examine for wear and deformation.

NUTS AND BOLTS - Using suitable spanner and Allen key, check for any loose nuts and bolts.

UPPER AND LOWER LIMIT - Ensure that it functions correctly in both the fully raised and fully (chain lever) lowered positions.

CHAIN COLLECTOR - Check security and condition.

It is recommended that the load chain and linkages are lubricated as part of this inspection routine.

When repairing Red Rooster air hoists only original Red Rooster products should be used.

INSPECTION
- Inspect the gearbox for oil leaks.
- Inspect the drive pinion and wheels for wear, damage and lubrication.
- Check air motor silencers and replace if necessary.
- Check wheel adjustment.
- Check anti-tilt roller setting.
- Check valves and fittings for security and air leaks.
- Check main air line connection for security and air leaks
- Check control lines for security and air leaks

4.2 Only minor repairs such as silencers, safety catches, pendant repairs, replacing shorter lengths of load chain and inspections should be done in location after this the hoist should be lowered to ground level and taken to a workshop. ⚠ **CAUTION**

If the hoist is taken out of service it should be sent to an approved repairer to be fully dismantled, repaired and tested. ⚠ **CAUTION**

Only Red Rooster approved parts should be fitted to the hoist but good quality European or Japanese load chain and bearings can be used but other than that only Red Rooster supplied parts should be used. ⚠ **CAUTION**

Hoist and trolleys are heavy along with some parts of some hoist so suitable lifting equipment should be used to dismantle and assemble hoists. ⚠ **DANGER**

TROLLEY VANE MOTOR MAINTENANCE

4.3 These motors are made to precise tolerances and it is vital for efficient operation to achieve minimum clearances throughout. Every clearance represents an air leakage path from inlet to exhaust, which will detract from the starting and running characteristics.

The spacing of the rotor is of prime importance in two ways:

- Rotor to end covers (side clearance) (Cs) nominally 0.050mm (0.002").
- Rotor to body casing (top clearance) (Ct) nominally 0.050mm (0.002").

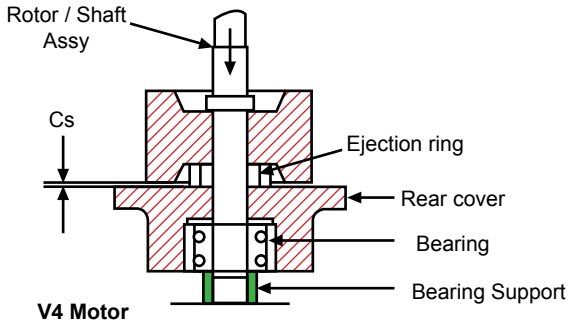

V4 Motor

To achieve the side clearance each repair kit has a series of plastic shims, colour coded to different thicknesses.

Purple = 0.025mm (0.001")
Blue = 0.050mm (0.002")
Green = 0.076mm (0.003")
Orange or Brown = 0.102mm (0.004")

This range of vane motors has two styles of rotor locations.
V4 rotor location by one double row bearing in rear cover.
V6 rotor location by one double row bearing in front cover.

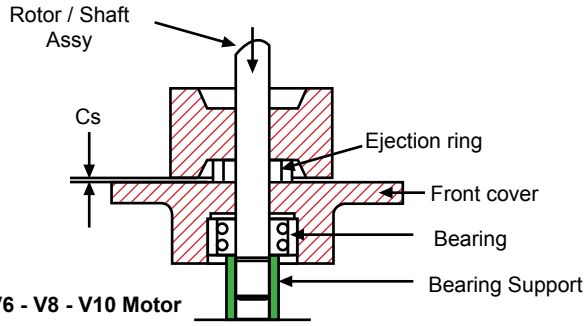

V6 - V8 - V10 Motor

ASSEMBLY DETAILS

All parts must be clean and it is recommended that new oil seals and blades are fitted as a matter of course. Press all bearings fully home into their respective covers, pressing only on the outer track to prevent damaging the bearings. On V4 motor fit oil seal retaining circlip and a new oil seal.

Take the location cover for your particular motor i.e. V4 rear cover and V6 front cover.

Provide good support on the inner bearing track, as the shaft fit is very tight, to provide rotor location. Place blade ejector ring central on cover and press rotor/shaft assembly down until there is a clearance. Cs of 0.050mm (0.002") between rotor and cover, check this clearance is even all round the rotor. Fit a blue plastic body gasket cover, lowering the body into position over the rotor assembly, locating on the existing dowels.

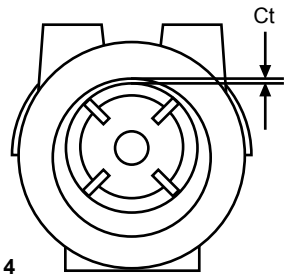

Fig. 4

NOTE: Ensure the body is the correct way round i.e. port arrows towards the output shaft.

Tighten body bolts and check top clearance, Ct, see Fig. 4. This should be 0.050mm (0.002") if there is a problem with this then repositiong and drill for new dowels. Insert second ejection ring, fit new blades, it may be necessary to work the lower ejection ring across in order to fit the opposite blade. Refer to Fig. 5 (axial and clearance, Cs). Measure this by putting a straight edge across the body, then use the feeler gauges in the gap between rotor and body face. This should be made up to 0.050mm (0.002") or as close as possible using the gasket set provided.

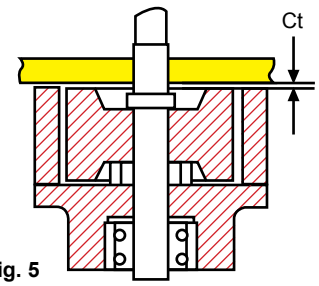

Fig. 5

Oil inside the motor, ensuring it is free to rotate. On V4 and V6 motors the second cover should slide down into position easily as the second bearing fir is nonlocating.

On V6 motors the front oil seal is carried in a separate housing, this should be fitted next, followed by the rear bearing cover and its gasket. On V4 motors the rear bearing cover and its o-ring can now be fitted.

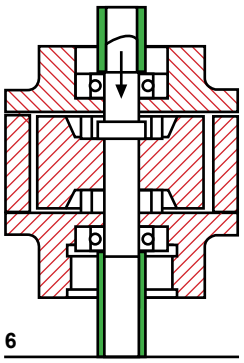

Fig. 6

4.4 SILENCING

The TNC hoist is fitted with an internal silencer; the noise output being less than 83 dB at one metre (this conforms to E.C. noise regulations).

TNC-10TWLPE, TNC-15TW/3, TNC-20TW/4

These types are fitted with a two stage silencer; the first stage is a nylon pad which traps air borne particles, preventing them from entering the second stage which comprises a multi-layer micro porous steel gauze.

The life expectancy of the silencer correlates closely with the quality of air supplied.

The nylon pad may be washed with degreaser and re-used once decontaminated.

Periodic examination of the silencer is not required, nor is it recommended (see below). As the silencer becomes contaminated a reduced speed of operation will be noted. At this point the nylon silencer should be cleaned or replaced and the gauze silencer should be changed.

4.5 CHANGING THE HOIST SILENCER(S) - see parts list.

TNC-10TWLPE, TNC-15TW/3, TNC-20TW/4

The silencer section is located on the top of the hoist motor.

Remove the four M6 Hex socket cap screws which retain the section and very carefully remove the section.

Remove the exhaust cover and lift out the silencer plates and replace. From the cover remove the nylon silencer and wash and / or replace. Replace the silencer section ensuring the cap screw is tightened evenly and then replace the cover and cap screws making sure no dirt enters the air motor.

⚠ CAUTION

ADJUSTMENTS AND MAINTENANCE OPERATIONS

Before carrying out any work on the hoist the main air supply should be turned off and the residual air vented or the hoist run to dissipate the air pressure.

Red Rooster hoists normally do not require any adjustment as the brake springs take up any wear and the load limiter and limits should not need adjustment once set.

The lubricator should be checked and topped up weekly in normal use or daily when heavily used.

The load chain should be checked monthly for lubrication and oiled if necessary. Where the load chain is not lubricated for operational reasons the chain should be inspected weekly as a dry chain can wear rapidly.

The top and bottom hooks should only be lubricated if required during checks.

The hoist gearbox is greased during assembly or repair and should not need greased during operation.

There are no hazardous substances in Red Rooster hoists.

4.6 CHANGING TROLLEY SILENCERS

Trolleys are fitted with SMC 'AM' type silencers sized to suit the trolley valve. They are easily fitted and removed by a thread end. Silencers should be replaced when damaged or the trolley speed is reduced by contamination.

4.7 FITTING OR REPLACING LOAD CHAIN

The hoist will require to be hung up with an airline connected.

The chain must be fed over the pocket wheel from the slack end anchor side with the weld of every second link facing away from the wheel axis i.e. weld outwards.

Care must be taken not to twist the chain during installation. This is best achieved by holding the live end of the chain as it emerges from the hoist, if the hoist is reeved on two parts of chain, feeding it through the free limit lock, through the bottom block wheel and again as it emerges, thereafter feeding it up to the anchor pin. If the chain cannot be fitted to the anchor without rotating it through 90 degrees, the end link should be removed.

Run the chain through the hoist, leaving a short tail at the 'slack' end. Anchor the slack end without twisting the chain.

Feed the chain over the load wheel.

It is very easy to trap or damage the chain if extreme care is not exercised. Always examine the first link of chain after passing it over the load wheel. If damaged, remove the damaged link(s). ⚠ **DANGER**

REPLACING EXISTING CHAIN

Cut away the centre portion of a link of the old chain to allow a chain diameter to pass through. Connect the spare link to the last link of the old chain and the first link of the replacement chain. Use the old chain to draw the replacement chain though the hoist. (Retain the spare link to be re-used). ⚠ **DANGER**

FITTING CHAIN TO AN UNCHAINED HOIST

A handy tool comprises a length of either soft insulated wire (about 2mm diameter) or a piece of flexible nylon tube of the same diameter approximately 500mm long. To the end of this attach a similar length of strong twine.

The soft wire or tube is fed over the wheel, its flexibility allows it to follow the chain guide and re-emerge at the opposite side. The twine is attached to the end of the chain and drawn through, pulling the chain against the wheel. By applying power VERY SLOWLY in the same direction of winding, the load chain is dragged into the first pocket and over the load wheel. If any resistance is felt as the chain attempts to enter the pocket it is imperative that the chain is released from the pocket before trying again. Otherwise the chain will become trapped and damaged. ⚠ **DANGER**

Only use quality load chain approved by Red Rooster for use on our hoists.

⚠ **DANGER**			
ITEM	CHECK METHOD	CRITERIA	WHEN FAILED
Deformation Flaw Entanglement	▪ Check visually 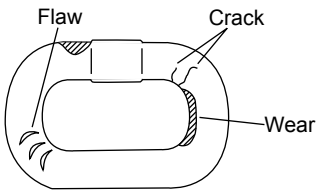 ▪ Check visually for no foreign matter as attached sputter.	▪ No deep notch ▪ No deformation such as twist ▪ No attached sputter ▪ No entanglement ▪ No crack ▪ Wear (see 4.8 + 4.11)	Replace the load chain

4.8 TYPES OF CHAIN

Only the correct size and grade of load chain should be used. ⚠ **DANGER**
All chain is to EN818/7 - EN1677 standard

TNC-50TW/4	STANDARD	
	RUD	
Nominal diameter:	22.0 + 0.8 / - 0.6	mm
Pitch:	66.0 + 0.9 / - 0.4	mm
Max dia at weld:	23.6	mm
Min breaking force:	630	kN
Surface hardness:	ca380-400HV10	
Grade:	EN818/7 ISO 3077	

When supplied new, only quality chain from a reputable supplier has been fitted to the hoist. Your supplier will be able to offer replacement chain of like quality.

4.9 EMERGENCY LOWERING

In the event of a main air supply failure Red Rooster pneumatic hoists will stop hoisting or lowering and the springs on the disc brake will automatically close the brake holding the load in position.

The next steps will depend on whether the load is being lifted at the time, how long it will be until the air supply is available again and if it is necessary and safe to travel / lower the load to a safe position.

If the problem is a burst hose, this can easily be replaced so there is no need to recover the load, but if the main compressor will not be operational for some time then a suspended load may need to be recovered to a safe position.

OPTIONS:

1) A secondary or back up compressor can be used as a temporary supply to move and or lower the load to a safe position.

2) Depending on the load and availability of manual rigging gear the load can first be lifted and the air hoist hook disconnected, then the load can be lowered to a safe position.

3) An emergency air supply from an air receiver or a high pressure cylinder and regulator set for 6 to 7 Bar pressure can be positioned within the working area of the hoist and the air supply hose connected via an on / off valve which can then be turned on to supply a limited amount of air to make the lift safe. This option will only allow for limited movement so try to choose the option that requires the least amount of running time.

The hoist requires 90 l/sec of air to lower a load so it can quickly use up a volume of compressed air.

If it is decided the safest course of action is to keep the hoist suspended the load then slings and shackles should be used to connect to the load from above (with a SWL equal or greater than the load being lifted by the hoist), to hold the load in case of brake slippage over a long period.

HOIST COMPONENTS AND CHAIN

4.10 TNC-50TW/4

CHAIN FITTINGS

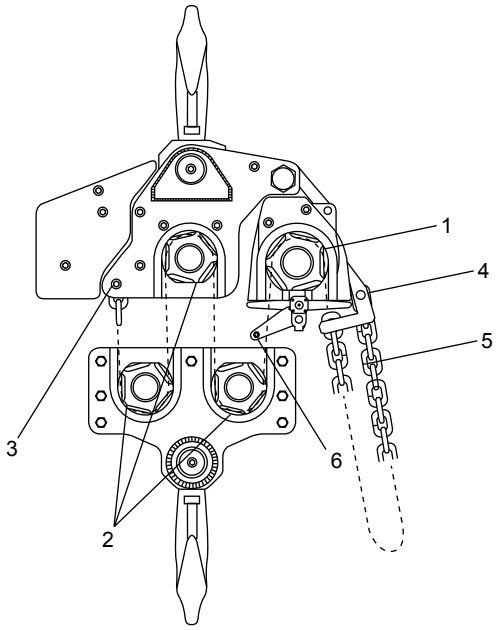

1	Load Sheave
2	Idle Sheave
3	Live End Chain Anchor
4	Dead End Chain Anchor
5	Welds Away From Chain Anchor
6	Limit Lever (Up)

TNC-50TW/4

HOIST PARTS

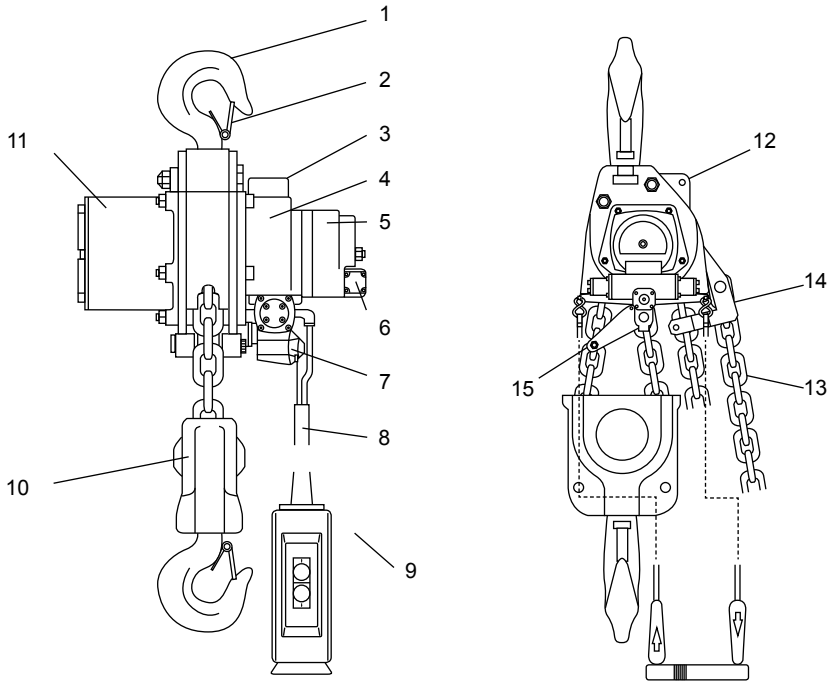

1	Upper Hook
2	Hook Safety Latch
3	Silencer Section
4	Motor Section
5	Brake Section
6	Load Limiter
7	Valve Section
8	Pendant Hose Set
9	Pendant Control with E/Stop
10	Lower Hook
11	Gear Box
12	Hanger Eye for Lifting the Hoist
13	Chain
14	Limit Lever Lowering
15	Limit Lever Lifting
16	Cord Control Lowering
17	Cord Control Lifting

SERVICE DATA

4.11 Maintenance chart
TNC-50TW/4

NO.	DESCRIPTION	CHECK POINTS	STD DIMENSIONS & MAX FOR REPLACEMENT
55	Vane	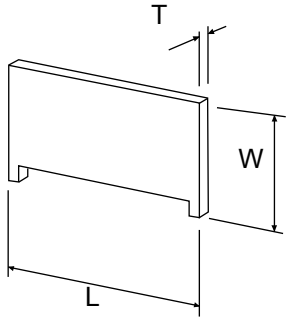	STD L = 80mm MIN L = 79.5mm STD W = 34.3mm MIN W = 32.3mm STD T = 5mm MIN T = 4.5mm Replace if any of the width, length and thickness is less than the stated minimums.
72	Brake Disc	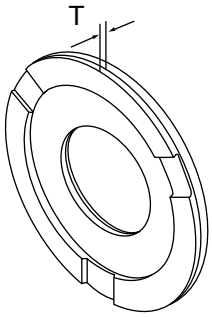	STD T = 4mm MIN T = 2.5mm Below minimum for replacement.
110	Cage	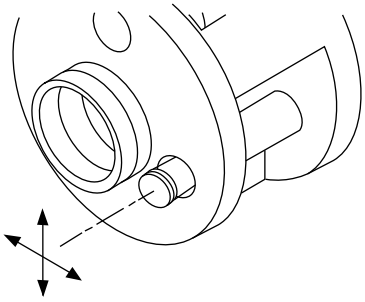	Replace when there is a large or uneven play in the pin hole.
111 114 115 117	Star Gear Pinion Wheel Ring Gear	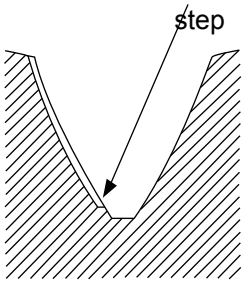	Replace if there is a step on the surface of the gear teeth.
112	Pin	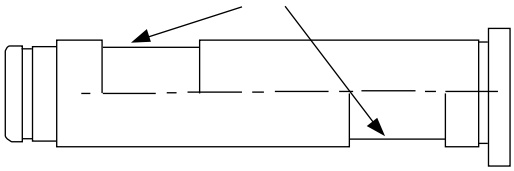	Replace if there is a step on the surface of the pin. If the pin is replaced, replace the needle bearing and star gear at the same time.

SERVICE DATA

4.11 Maintenance chart
TNC-50TW/4

NO.	DESCRIPTION	CHECK POINTS	STD DIMENSIONS & MAX FOR REPLACEMENT
115	Wheel	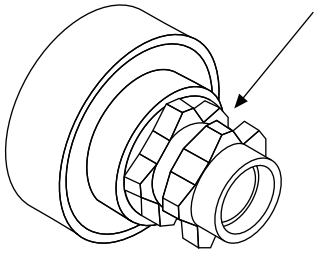	Replace if loadsheave part is badly damaged or worn.
91	Chain Guide	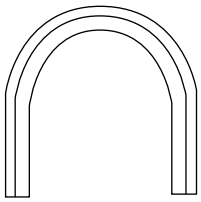	Replace if the wear of any part of the chain guide exceeds more than 1mm.
140 142	Upper Hook Swivel Hook	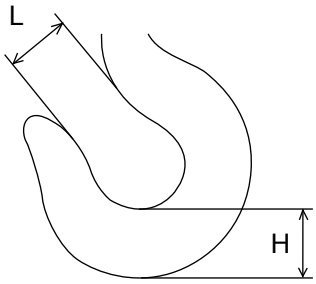	Dimensions: STD L = 140mm MAX L = 142.8mm STD H = 132mm MIN H = 126.7mm Check dimensions as casting size can vary. Replace if beyond maximum ‘L’ or ‘H’. There is some variation in the 'H' size on hooks so it is best to measure the hook when new and then allow up to 1mm of wear.
101	Load Chain	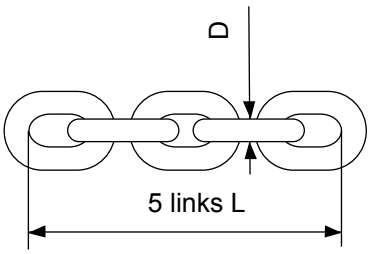	STD L = 330mm MAX L = 333.8mm Replace if L exceeds MAX L. STD D = 16mm MIN D = 15.5mm Replace if D is less than MIN D Also replace if the link chain is severely damaged.
		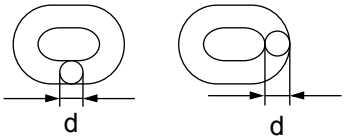	Measure the chain diameter (d) with point caliper.

LAYING UP THE HOIST

5.1 LAYING UP THE HOIST

Whenever the hoist is unused for a period (weekends, holidays or in store), a little preparation will ensure that the hoist operates correctly and safely, either before being put into service for the first time or when being put back into service after a layup.

SHORT LAY UP PERIOD (2 TO 90 DAYS):

Air hoists should be kept clean, lubricated and stored in a clean and dry location.
When not in use seal off from the air supply inlet and run extra oil through the hoist as per lay up instructions.
Wherever possible keep the hoist protected when in use and installed in an exposed location, protecting controls and hoses from damage.

Turn up the oil delivery rate of the lubricator to maximum and run the hoist for two minutes, thereby ensuring that the hoist motor and control valve are well lubricated. (This also helps to displace any water which may be lying in the hoist). ⚠ **CAUTION**

LONG TERM LAY UP PERIOD (3 MONTHS TO 24 MONTHS):

- Heavily lubricate the hoist as specified above.
- If the hoist is contaminated with dirt or chemicals, wash with a propriety mild solvent or detergent and thoroughly rinse off with fresh water. Allow to dry and spray lightly with penetrating fluid.
- Lubricate the load chain, limit shafts, safety latches, and hook swivels.
- Disconnect the air supply and plug the inlet port.
- If required, dismantle the chain collector, pendant, air set and trolley for storage.
- Store in a dry ventilated area.
- Secure hoist in a crate or suitable pallet.

Transportation - Moving your Red Rooster hoist between locations.
Carefully disconnect from suspension point and lower under control to ground level.
Be sure that chain collector, valves and trolley drives are not damaged.
Carefully lay the pendant on top of the hoist making sure tubes or hoses are not damaged.
Secure the hoist and chain to the shipping container or pallet.

For long term storage corrosion inhibitors (wax coatings) can also be applied to suitable surfaces and then removed before use.

Before connecting the air supply line to the hoist, pour 5 to 10 cc of Atlub air tool oil directly into the airline to ensure that oil is present in the motor startup. ⚠ **CAUTION**

If being stored long term especially outside ask for a copy of the full procedure - AHLU-15

NOTE: See full lay up procedure in document package, if required.

CHAIN COLLECTORS

6.1 When supplied new the chain bag or chain bucket will have been sized to suit the HOL of the hoist with spare capacity to allow for some bunching up of the chain. The use of a chain collector can make the operation of the hoist more efficient preventing dangerous occurrences with the chain getting caught or falling from the load being lifted as it mounts up on top of the load.

On hoists from 250 kg to 6 tonne with a high HOL and chain sizes over 11.2mm, galvanised chain collectors are used, with stainless steel buckets being used on ATEX hoists and in areas of high corrosion.

On arrival at site the load chain should be removed from the chain collector either manually or by carefully running out of the hoist checking for snagging. The chain should then be run back into the collector by the hoist checking there are no twists in the chain that the bottom hook is not twisted through the chain fall on multi-fall blocks.

Hoists with long drops of chain and heavy loads in the chain collectors will require a secondary suspension point to hold the hoist in a vertical position when unloaded. These may be as shown in section 1.8 or a secondary trolley on a runway beam.

If operating without a chain collector the slack end of the chain may catch or get caught on top of a load.
Always make sure the unloaded chain is running freely.

⚠ DANGER

- Do not exceed the chain collector capacity.
- When the load chain is dry it may not run freely into the chain collector and over fill the collector, so the chain must be kept lubricated to prevent it running out of the collector.
- Make sure the chain collector brackets have not been damaged during installation.
- Make sure the chain collector is free to move when the hoist is loaded and un-loaded.
- Make sure the bottom hook does not connect with the chain collector. Limit the lifting height of the bottom hook if necessary.
- For any assistance required on chain collectors please contact Red Rooster Lifting Ltd.

CHAIN COLLECTORS

TNC-50TW/4

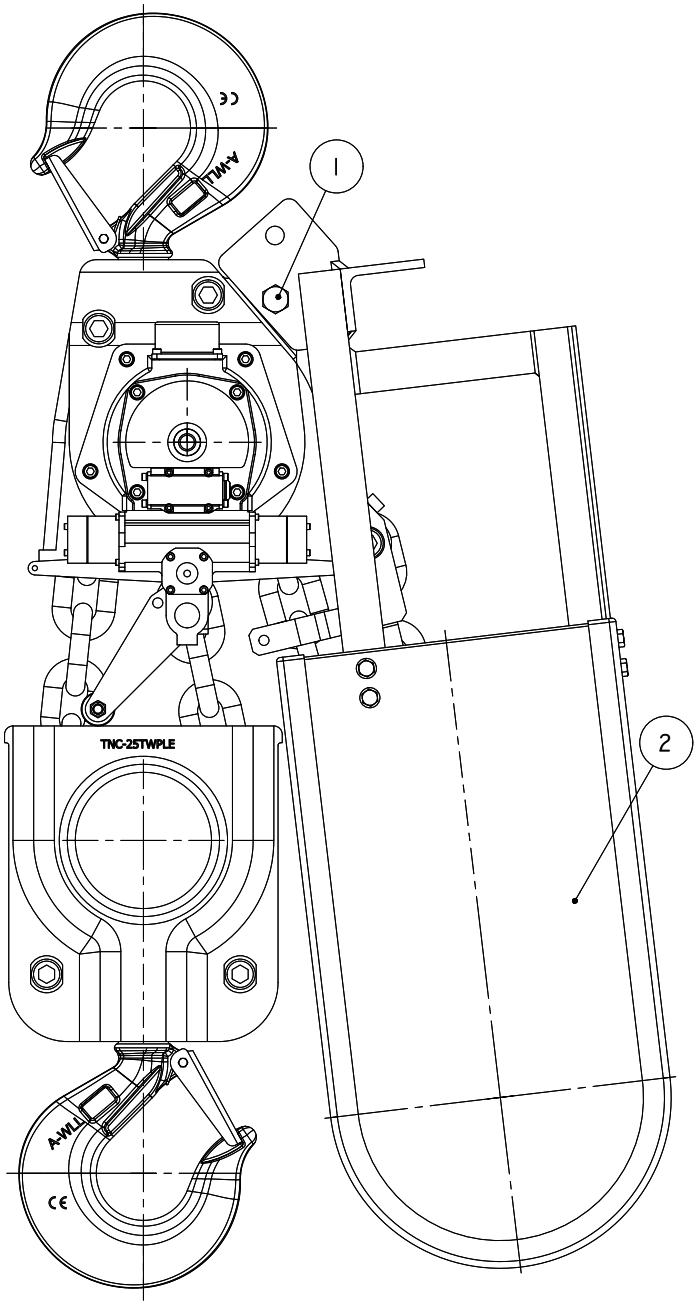

1	BOLT M20 X 120
2	CHAIN BUCKET

SPEED & LOAD LIMITER ADJUSTMENT

7.1 SPEED ADJUSTMENT

Every TNC hoist is checked at the factory to ensure the maximum hoisting speed is in accordance with the specification.

CORD CONTROL HOIST

The speed of the hoist is proportional to the amount of downward movement in the control cord, which via the cord lever controls the amount by which the valve is opened.

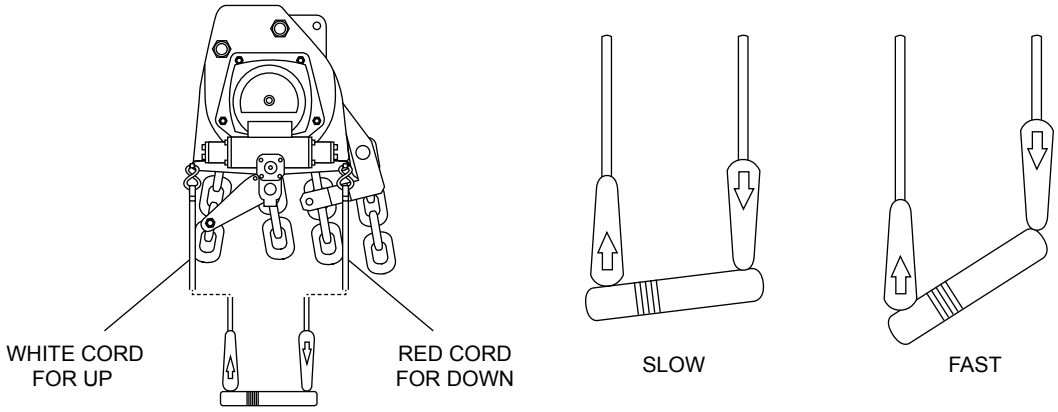

On every TNC hoist the load limiter is factory set to operate at a load ten percent in excess of the safe working load, at an operating pressure of 6 bar. Unless a lower supply pressure is to be used, the load limiter will not require adjustment.

All models in the range incorporate an adjustable load limiter, except the mini TCR-250 and TCR-500/2 hoists that are not fitted with load limiters.

HOW IT WORKS

Located adjacent to the control valve, the load limiter measures the pressure drop across the motor which is proportional to the load on the motor. Once the pressure drop is increased above that of the load limiter setting, the brake is applied and the hoist will not lift the load. In this case the load should then be reduced or a larger capacity hoist installed. The load can still be lowered when the load limiter cuts in.

⚠ CAUTION

Verify that the Chain / Limit Levers are operational and can move freely in both the up and down directions.

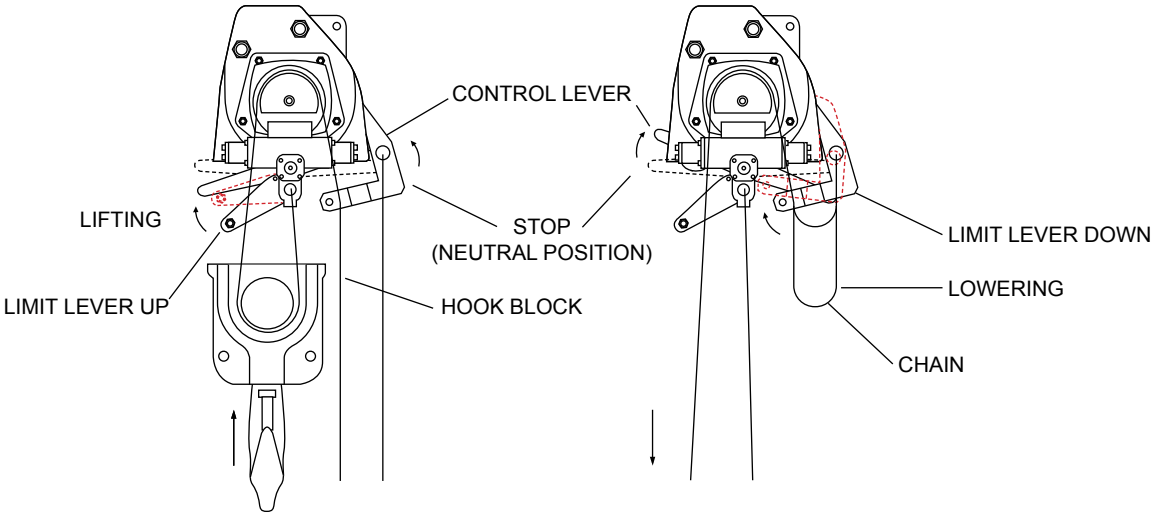

OPERATIONAL BREAKDOWN / TROUBLESHOOTING THE TNC HOIST & TROLLEY

8.1 We list below a number of faults which may occur during use, together with the probable cause and the cure. If you experience a fault and cannot identify the cause, or if you do not feel confident to remedy the fault, please revert to your hoist supplier.

Description of fault noted	Possible cause of fault	Remedy
Hoist or trolley fails to start (when newly installed)	Air supply switched off	Switch on air supply.
	Damaged or kinked pendant hose	Disconnect pendant from control valve and check if there is pressure. Replace as necessary.
	Emergency stop actuated	Re-set emergency stop.
	Control valve sticking	With air supply switched off, open and close the valve using a spanner on the limit lever. Do not use excessive force. If this fails, refer to dealer.
	Air pressure too low	Increase air pressure to the required valve. (6 bar)
	Hand control is faulty	Have hand control repaired.
Hoist or trolley starts but slows down and stops (when newly installed)	Inadequate air supply	Check compressor output against hoist requirements. Check air hose size against table. Ensure fittings are matched to hose size. Replace incorrect items.
	Regulator set in excess of 7 bar	Reduce to 6 bar / Fit regulator.
	Air supply hoses leaking or loose	Check connections of air supply hose and control hoses and connect properly.
	Silencer is clogged	Replace or clean silencer elements, improve air quality if necessary.
Hoist or trolley starts but will not stop	Sticking valve on pendant	Clean and lubricate valve, replace if necessary.
	Contamination within the control valve	Dismantle, clean and lubricate .
Hoist or trolley sometimes refuses to start	Worn vanes or damaged vane springs	Dismantle and replace as necessary.
	Motor has run dry	Lubricate motor, check oiler.
	Control valve on motor	Have control valve replaced / serviced
Load chain jumps or makes a clicking sound	Worn load chain or guide	Dismantle and replace as required.
	Chain twisted	Incorrectly fitted - remove and refit (examine). Bottom block twisted through chain parts (2 fall models only).
	Chain sprocket worn	Replace chain sprocket, check chain guide, replace if necessary.
Motor 'stutters' and recovers periodically	Excessive moisture in air supply	Increase infiltration or fit a dryer.
Premature wear in load chain	Inadequate lubrication of load chain	Lubricate the chain.
	Support Vibration	Find cause of vibration.
	Hoist constantly operating at close headroom	Fit a ball bearing swivel below the hook.
Trolley fails to move	Trolley adjustment Obstruction on beam Hose festoon jammed	Adjust spacers and tie bars Remove obstruction Adjust/repair festoon

PERIODIC EXAMINATION AND TESTING

9.1 EXAMINATION

UK & European Law requires that a thorough examination of the hoist should be carried out by a competent person:

- Before being put into service.
- At a frequency not exceeding 12 months (6 months for equipment used offshore).
- After being put into service at a new site.
- After involvement in an accident or dangerous occurrence.
- After a significant change in the conditions of use.
- After long periods out of use (time not specified).

Lifting operations and lifting equipment regulations 1998, section 9 refers. (LOLER 1998 №2307)

The record of such examination must be retained for as long as the employer continues to operate the equipment. The regulations also call upon the employer to carry out a risk assessment; to adjust the frequency of inspection according to the potential risk, to determine the nature of inspections and to ensure that the persons carrying out the inspection are competent to do so.

9.2 SIX MONTHLY OFFSHORE INSPECTION

Arrange to have the hoist examined by a person specifically trained and experienced in the examination of lifting machines. This can be done by a Red Rooster engineer or an independent competent person. Ensure that the party is operating to a detailed inspection procedure or code of practice.

SERVICE

We would recommend the hoist is returned every 5 years for a full inspection and service.

9.3 TESTING

LOLER 98, section 4 calls for the employer to ensure that the hoist is of adequate strength and stability for each load. No frequencies or test or proof loads are specified.

In the case of the TCR, TCS + TNC hoists the hoist is functionally tested with a proof load of 125% of the safe working load prior to delivery (Test certificate refers).

It is recommended that the test is repeated along with a thorough examination if the hoist is substantially repaired (i.e. any repair which may affect the hoists ability to lift, lower and sustain a load).

REPEAT PROOF LOAD TESTING OF THE HOIST SHOULD BE AVOIDED

NOTE!
If your hoist is a “spark resistant” zone 1 version; check the bronze coating of the lower and upper hook on signs of wear. A worn out coating is NOT spark resistant anymore and can cause dangerous situations. Therefore let the bronze coating be renewed by your supplier in time.

DUTY RATINGS

10.1 FEM 9.511 classifies the theoretical loading conditions and operating time in hours per day.

FEM 9.755 classifies the theoretical duration of service for safe operation.

APPLICATION OF FEM RULES TO PNEUMATIC HOISTS

With most mechanical equipment, the limiting factor with regard to operating time is that of HEAT GENERATION.
For example, an electric motor if not periodically allowed a 'rest period' to allow it to cool down after each period of use will cease to function due to irreversible damage arising as a consequence of the heat.

Air motors perform differently. Although heat is generated, providing that the motor is properly lubricated, no damage will ensue. The expanding air at the outlet manifold also has a cooling effect on the motor.

As a result pneumatic motors are commonly referred to as 100% duty rated or continuous rated, which means simply that they may be used continuously without a cooling down period and without damage arising as a consequence.

Incorporated into the TNC hoist are three classes of components:

1. Sacrificial components - These components are designed to incur wear to either protect other components or to function by means of friction generation. They require periodic inspection and replacement and comprise of the rotor vanes and the brake disc. Inadequate lubrication seriously reduces the life expectancy of the vanes.

2. Load chain - Whilst adequate lubrication of the load chain will reduce friction and thereby limit the wear occurring between the bearing points of adjacent links, it will not totally eliminate it. Hence it will require regular inspection and will also require replacement within the service life of the hoist.

3. Structural and mechanical components - These comprise all other parts of the hoist, including gearbox and bearings, rotor and housing, valve, hooks, pins etc. A theoretical service life for every component has been calculated (available on request). For the purposes of the summary, the SHORTEST service life of any component has been included.

10.2 TABLES OF DUTIES - TNC Hoist

FEM standard	For all mentioned TNC models
FEM 9.511	1 Am (M4)
Theoretical duration of service	
FEM 9.755	
Sacrificial components	1Am (M4) 800 to 6300 hours
Load chain	2M (M5) 1600 to 12500 hours
Structural & mechanical components*	2M (M5) 1600 to 12500 hours

*Shortest duration stated.

IMPORTANT NOTES

- A hoist is deemed to be operating when it is in motion.
- All ratings are based on a clean, dry, air supply and correct lubrication.
- Load chain must be to manufacturer's specification.
- Special chains are excluded (consult your supplier).
- Mode of use must be in accordance with manufacturer's recommendation.

EXPLOSION PROTECTION

11.1 In Europe and several other parts of the world the use of non-electrical equipment in a hazardous area is covered by the ATEX 2014/34/EU Directive. (Previously ATEX 94/9/EC) This is split into two categories of equipment available from Red Rooster –
Group I Mining (I M2) De-energised in and emergency and Group II – (Zone 1 & 2).

The Explosive Protection Level (EPL) has been set when the effective ignition sources are identified and when they become effective in normal operation and in the case of expected malfunctions. The normal ambient temperature range for Red Rooster air hoists is -10°C to +70°C, with some slight modifications we can make the equipment suitable for -20°C.

As standard all Red Rooster air hoists are certified as Group II Category 3 (Zone 2 Gas or 22 Dust) This excludes the TMM-140.

Standard Hoist – Zone 2 (Gases) Zone 22 (Dust) Rating Ex Group II 3 GD Ex h IIA (T4) 135°C
Extra protection – Zone 1 (Gas) Zone 21 (Dust) Rating Ex Group II 2 GD Ex h IIB (T4) 135°C
Increased protection Zone 1 (Gas) Zone 21 (Dust) Rating EX Group II 2 GD Ex h IIC (T4) 135°C

Red Rooster hoists will cover temperature classes T1 to T4 so can be certified to work with all Gases with the exception of Carbon Disulphide which is in temperature class T6.

The glow temperatures for dusts must be above 220°C or ignition temperatures above 202°C for use in Zones 21 and 22.

Mining – Ex Group 1 M2 (Mechanical equipment de-energised in an emergency)

TROLLEYS AND OVERHEAD CRANES
Red Rooster trolleys and overhead cranes use standard steel wheels for use in a Zone 2 area and normally with Bronze wheels in a Zone 1 area with a Gas group of IIB or IIC. The normal running speeds of our trolleys and overhead cranes are less than the 1 m/s that the standard allows. (Steel wheels can be acceptable for Zone 1 Gas Group IIB)

When built into an assembly such as an overhead crane the ATEX rating will be for the complete assembly, which may be less than some of the individual parts.

SPECIAL INSTRUCTIONS
This section of the manual refers to special instructions to special instructions, exclusions or warnings about the equipment.

Several gases such as hydrogen sulphide and ethylene oxide are at the very top of the IIB temperature class and are extremely flammable so you may wish to include them in the higher IIC temperature class. This is also relevant for impact sensitive dusts, around light metals, dusts with glow temperatures less than 210°C and ignition temperatures below 202°C. In an area where combustible dusts are present the surface temperature cannot exceed two thirds of the minimum ignition temperature of the dust and air mixture or the glow temperature of the dust.

Ambient temperature range for air hoists is -20°C to +70°C
Ambient temperature range for air trolleys is -20°C to +60°C

Some models of Red Rooster equipment can only be certified for use in temperature class T5 or T6 when a special assessment has been completed.

Air motors, control valves and hoses are all positively pressurised so gas or dust cannot penetrate internal parts when operating or when under pressure.

Red Rooster hoists and trolleys are constructed to avoid the build-up of dust deposits. But where dust does build up, provision shall be made for removal of the dust and keeping the hoist, trolley and pipework clean.

External influences such as heat from direct sunlight or exhausts can affect the hoist so the ambient temperature should be checked. Other influences such as cold, wind, water, compressor air temperature, contact with chemicals and mechanical hazards can all have an affect on the hoist operation.

EARTHING
The hoist or hoist and trolley should normally earth through the top hook or the running wheels of the trolley into the supporting steel structure. If this does not happen then the hoist can earth through the load chain of the hoist, when grounded. If the chain is rusty it can affect the earthing of the hoist. During inspection the chain may need cleaning, oiling or replaced to allow adequate earth leakage. If the earth leakage is less than that recommended a separate earth strap should be fitted. Neither the running surface of beams nor the wheels should be painted. During lifts the load may be required to be earthed if there is any doubt as to the earth leakage from the hoist.

EXPLOSION PROTECTION

11.1 IMPACT HAZARDOUS

The materials chosen and there coverings should help to prevent and ignition hazard so that a corroded section of steel does not impact against a light metal or high grade steel. The selected materials and the design should exclude as far as possible mechanical sparks due to impact, sliding or friction. Where external housings are made of aluminium then the possibility of impact should not be possible.

PLASTIC SURFACES

Where plastic has been used for the pendant, control boxes or on the hoist these surfaces must only be cleaned with a damp cloth (water), which reduces electrostatic charging due to friction from wiping with a cloth.

COMPRESSED AIR HOSES

All air hoses used in a Zone 1 & 2 areas should be 'Anti-Static' with a sufficiently low surface resistance to prevent an electrostatic ignition hazard. The Hose should always have a higher Safe Working Pressure that the hoist and above that of the air supply from the compressor.

Air supply hoses need to be certified with a current report on the condition of the hose and checked before fitting to the hoist. The burst of a hose or connection failure can create a dust cloud and also create a static charge.

Hose safety whip cables should be used to prevent hoses flying if a connection fails to limit the dust cloud and the flying hose.
*Red Rooster hoists should only be operated with compressed air.

MINING APPLICATIONS

In general most standard Red Rooster hoists can be used for underground mining operations along with the surface buildings and services. The equipment is certified for Group I M2 use, so must be switched off / isolated in the event of an emergency. The equipment has to be robust, non-sparking, taking into account the conditions and the handling underground and be built to survive along with explosive protection from Methane gas / dust - Firedamp. The maximum surface temperature of 150°C for coal dust atmospheres will not be reached where a coal dust layer can be formed or 450°C where coal dust will not form a layer.

⚠ DANGER

- During use the operator must avoid loads or the bottom hook impacting with surrounding steel equipment and structural steel which may result in sparking or frictional sparks caused by dragging loads past fixed structures.
- Any impacts involving light metal or cast iron should be avoided and these materials either protected or removed from the area.
- Damaged or badly corroded coatings or chain should be replaced or repaired to keep up the ATEX rating of the equipment. For assistance contact RRL.
- Earthing of hoists is not usually required as the hook connection to structure allows the hoist to connect to earth.
- The running surfaces of beams and cranes should not be painted to allow wheels to earth to the structure.
- Stainless steel 'C' track systems should be applied with an earth wire to connect onto the structure.
- Plastic junction boxes should only be cleaned with water and a clean cloth to reduce any electrostatic charge coming from the rubbing of the plastic surface.
- Dust should not be allowed to accumulate on the hoist, trolley, crane or junction boxes.
- Only use a damp cloth for wiping plastic surfaces.

TECHNICAL SPECIFICATION - STANDARD 4 WHEEL TROLLEYS

12.1 TABLE 1

Lubricator recommended drop rate per minute

TROLLEY CAPACITY	CONTINUOUS OPERATION	INTERMITTENT OPERATION
0.25 + 0.5 Tonne	4 - 5	9 - 12
0.5 to 6 Tonne	4 - 5	9 - 12
9 to 25 Tonne	5 - 6	10 - 12

TABLE 2

Beam trolley flange ranges for four wheel trolleys

FLANGE WIDTH RANGE	LIFTING CAPACITY (TONNES)				
	0.25 to 2 Tonne	3 Tonne	6 Tonne	9 Tonne	10 Tonne
R1	55 to 140 mm	80 to 160 mm	90 to 160 mm	110 to 180 mm	110 to 180 mm
R2	140 to 220 mm	160 to 230 mm	160 to 230 mm	180 to 240 mm	180 to 240 mm
R3	220 to 330 mm	230 to 300 mm	230 to 300 mm	240 to 300 mm	240 to 300 mm

FLANGE WIDTH RANGE	LIFTING CAPACITY (TONNES)				
	12 Tonne	15 Tonne	20 Tonne	25 Tonne	
R1	110 to 180 mm	110 to 180 mm	130 to 200 mm	130 to 200 mm	
R2	180 to 240 mm	180 to 240 mm	200 to 260 mm	200 to 260 mm	
R3	240 to 300 mm	240 to 300 mm	260 to 320 mm	260 to 320 mm	

TABLE 3

LIFTING CAPACITY	TROLLEY SPEEDS			AIR CONSUMPTION
	STANDARD	OPTION	ATEX	
0.25 to 2 Tonne	9 m/min	14 m/min	6 m/min	25 l/sec at 6 Bar
3 to 6 Tonne	6 m/min	14 m/min	6 m/min	50 l/sec at 6 Bar
9 to 12 Tonne	8 m/min	N/A	N/A	50 l/sec at 6 Bar
15 Tonne	6 m/min	N/A	N/A	50 l/sec at 6 Bar
20 to 25 Tonne	4 m/min	N/A	N/A	50 l/sec at 6 Bar

TABLE 4

LIFTING CAPACITY	MINIMUM BEND RADIUS
0.25 to 2 Tonne	1.5 m
3 to 12 Tonne	2.5 m
15 to 25 Tonne	3.0 m

TNC-50TW/4-AT25-2S
AIR HOIST & TROLLEY

RED ROOSTER LIFTING

STANDARD FEATURES

- Toku rotary vane motor
- ATEX zone 2 specification
- Robust epicycle gearbox
- Failsafe automatic internal disc brake
- Choice of pendant controls or control stations
- Upper & lower limit switches
- Cast steel housing
- Internal silencing down to 83 dB(A)
- Alloy safety swivel hooks with safety catch
- Load chain of European manufacture to EN818-7
- Automatic load limiter
- Trolley to suit various flange profiles
- Anti-tilt & anti-drop plates
- High efficiency motor gearbox
- Heavy duty sealed wheel bearings
- Wheel profile to suit parallel or tapered flanges

AVAILABLE OPTIONS

- Marine specification
- Special paint systems
- Collision bumpers
- ATEX zone 1 specification
- Chain collectors (galvanised or stainless steel)
- Articulated trolley
- Low headroom units
- Rack & pinion drive
- Travel limits
- Air service units
- Festoon systems
- Radio control remote
- Optional travel speeds
- Beam brake

Image for illustration purposes only

HOIST MODEL	TNC-50TW/4-AT25-2S
WLL	50000 kg
CHAIN FALLS	4
LIFTING SPEED FULL LOAD	0.3 m/min
LIFTING SPEED WITHOUT LOAD	0.45 m/min
AIR CONSUMPTION (L/SEC)	90
WORKING PRESSURE	6 bar
AIR CONNECTION	1" BSP
MINIMUM HOSE DIA.	1"
WEIGHT 3M HOL & TROLLEY	1900 kg
ADDITIONAL METRE HOL	43.6 kg
TROLLEY MODEL	AT50-2S
G.A. DRAWING	1506-00
FLANGE RANGE 1	205-260
FLANGE RANGE 2	260-320
STANDARD TROLLEY TEMP RANGE	-10 to +50°C
OPTIONAL TROLLEY TEMP RANGE	-20 to +70°C
TRAVEL SPEED (M/MIN)	4
WHEEL MATERIAL	Steel
ATEX ZONE 1 WHEEL MATERIAL	Bronze
MINIMUM BEND RADIUS (M)	Straight only
NUMBER OF WHEELS	8
DRIVEN WHEELS	4
MAX AIR CONSUMPTION	80 l/sec
HOSE ID TROLLEY	1.25"

AT_S = STANDARD AT_ATX = ATEX

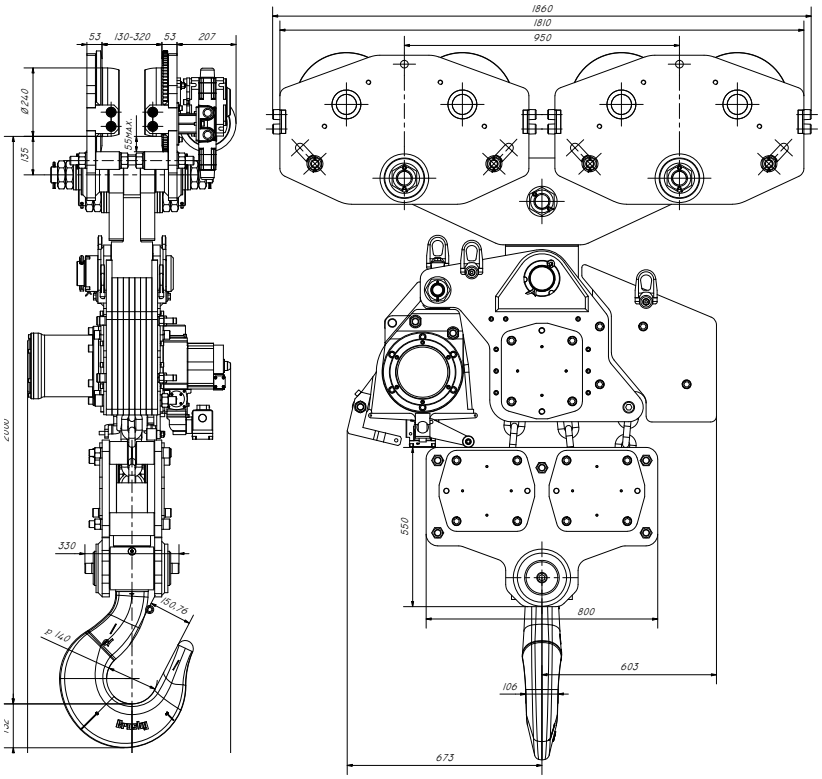

All measurements are in mm
Information subject to change without notice

ATEX ZONE 2 AS STANDARD

RED ROOSTER LIFTING
Nauta House, The Meadows
Oldmeldrum, Aberdeenshire
United Kingdom, AB51 0EZ

T: +44 (0) 1651 872101
E: sales@redroosterlifting.com
W: www.redroosterlifting.com

DRAWINGS AND PARTS LISTS

REVISION HISTORY		
REV.	DATE	APPROVED
0		

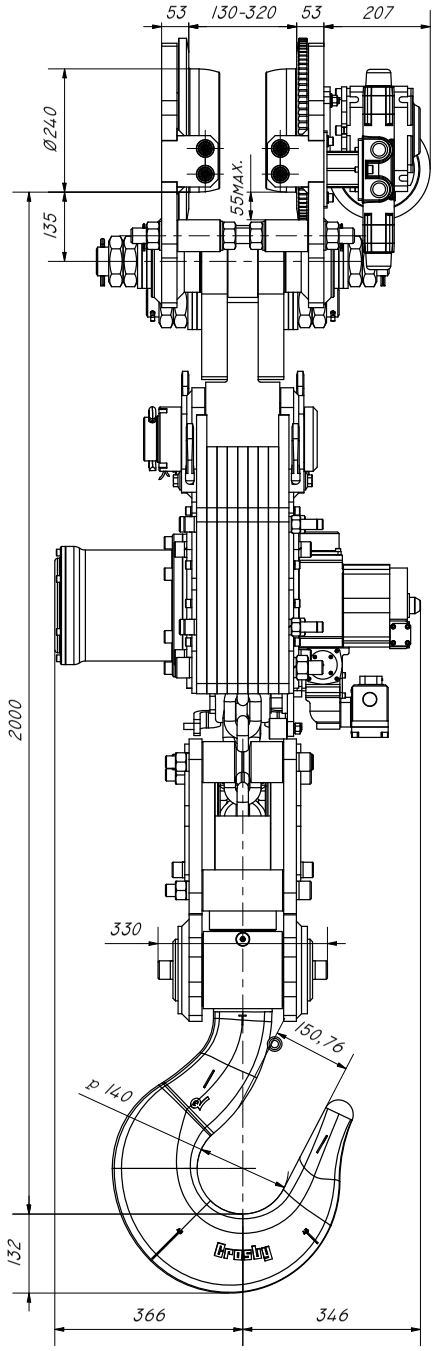

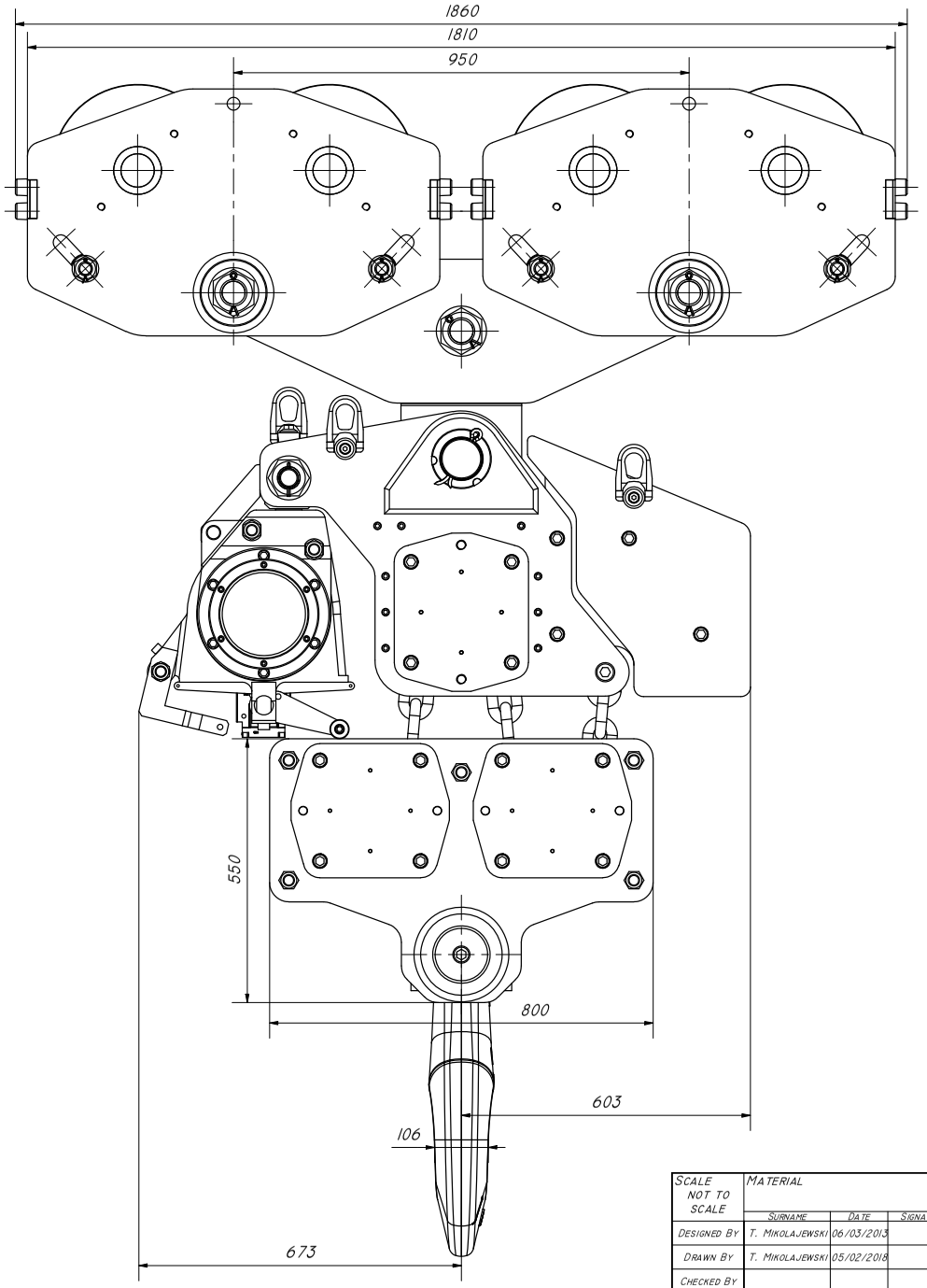

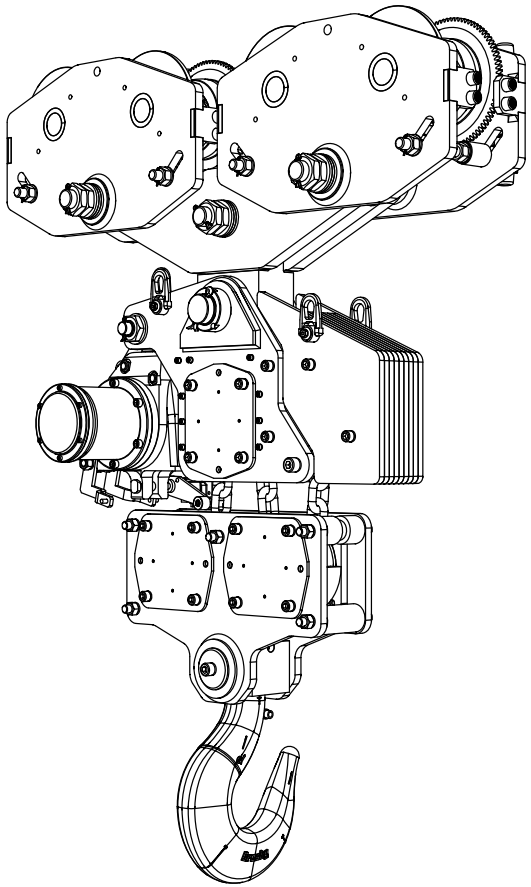

SCALE NOT TO SCALE	MATERIAL			TITLE OF PART: 50T HOIST AND TROLLEYS	PART NUMBER: DRG 1506-00 1 / 1
	SURNAME	DATE	SIGNATURE		UNLESS OTHERWISE SPECIFIED
DESIGNED BY	T. MIKOLAJEWSKI	06/03/2013		RED ROOSTER LIFTING — NAUTA HOUSE, THE MEADOWS, OLDMELDRUM, ABERDEENSHIRE, AB51 0EZ; TEL. +44(0)1651 872101; MAIN FAX +44(0)1651 872098; WWW.REDROOSTERLIFTING.COM	DATE: 05/02/2018
DRAWN BY	T. MIKOLAJEWSKI	05/02/2018			ALL DIMENSIONS ARE IN MILIMETERS
CHECKED BY					REVISION: 0 / WEIGHT: 1900KG
APPROVED BY	B. AITKEN				REPLACES DRAWING: -
SHEET SIZE: A3				TITLE OF PROJECT: TNC-50TW/4-AT50-2S	PROFILE NUMBER: -

TOLERANCES
LINEAR
UP TO 5 ± 0,05
OVER 5 UP TO 30 ± 0,1
OVER 30 UP TO 120 ± 0,2
OVER 120 UP TO 500 ± 0,25
OVER 500 UP TO 1000 ± 0,5
OVER 1000 ± 1
ANGULAR ± 0,5°
SURFACE ROUGHNESS N10
IF IN DOUBT ASK

REVISION HISTORY		
REV.	DATE	APPROVED
1		

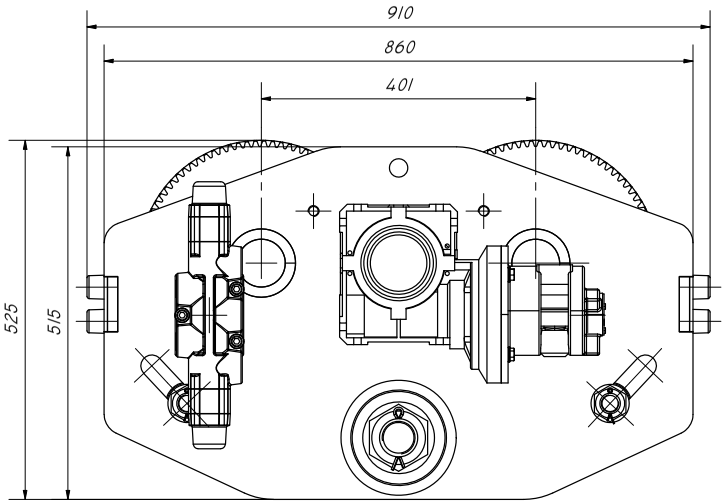

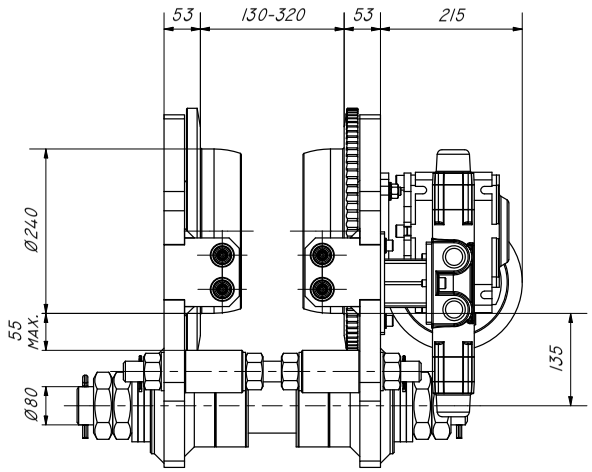

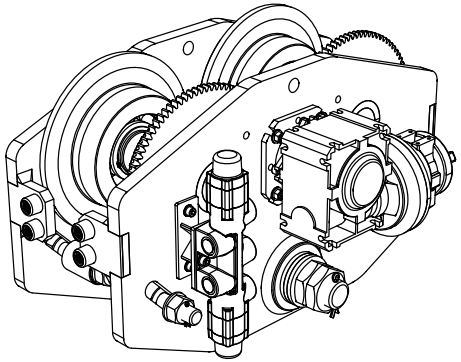

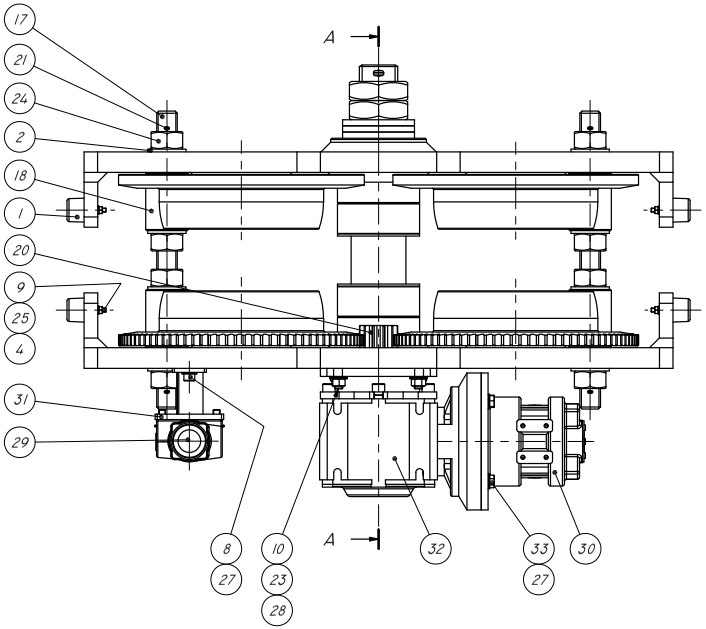

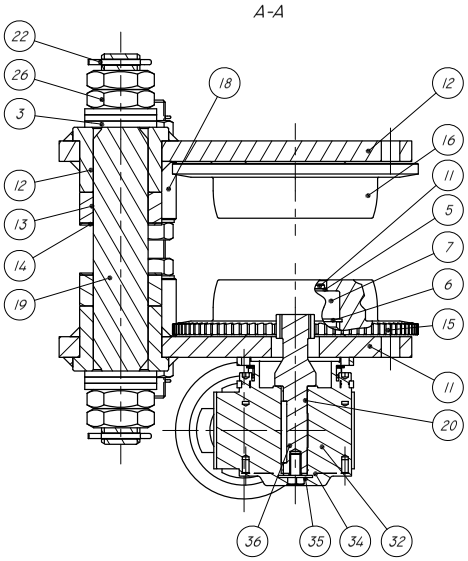

PARTS LIST

ITEM	QTY	PART NUMBER	DESCRIPTION	REV.
1	8		BUFFER	0
2	8	DIN 125 - A 31	WASHER	
3	6	DIN 125 - A 58	WASHER	
4	8	DIN 125 - A 6,4	WASHER	
5	4	DIN 471 - 85 x 3	SPRING RETAINING RING	
6	4	DIN 472 - 180 x 4	SPRING RETAINING RING	
7	4	DIN 625 SKF - SKF 6317-2Z	DEEP GROOVE BALL BEARINGS SINGLE ROW WITH TWO Z SHIELDS SKF	
8	5	DIN 912 - M10 x 25	CYLINDER HEAD CAP SCREW	
9	8	DIN 912 - M6 x 50	CYLINDER HEAD CAP SCREW	
10	4	DIN 913 - M12 x 40	HEXAGON SOCKET SET SCREW	
11	1	DRG 1505-02	MOTOR PLATE	0
12	1	DRG 1505-03	SIDE PLATE	0
13	DEPENDS ON THE FLANGE	DRG 1505-09	SPACER	0
14	DEPENDS ON THE FLANGE	DRG 1505-10	SPACER WASHER	0
15	2	DRG 1505-11	GEAR WHEEL	0
16	2	DRG 1505-12	PLAIN WHEEL	0
17	2	DRG 1505-13	TIE ROD	0
18	4	DRG 1505-14	ANTI TIP ROLLER	0
19	1	DRG 1505-15 OR DRG 1505-16 OR DRG 1505-17	LOAD BAR (RANGE I - FLANGE 130÷200MM) LOAD BAR (RANGE II - FLANGE 200÷260MM) LOAD BAR (RANGE III - FLANGE 260÷320MM)	0 0 0
20	1	DRG 1505-18 OR DRG 1505-25	PINION SHAFT (FOR GEARBOX BONFIGLIOLI) PINION SHAFT (FOR GEARBOX NORD)	0 0
21	4	ISO 1234 - 4 x 40	SPLIT PIN	
22	2	ISO 1234 - 8 x 71	SPLIT PIN	
23	4	ISO 4032 - M12	HEX NUT	
24	8	ISO 4032 - M30	HEX NUT	
25	8	ISO 4032 - M6	HEX NUT	
26	4	ISO 4035 - M56	HEX NUT	
27	9	NL10SP	M10 NORDLOCK WASHER LARGE DIAMETER GLUED PAIR	0
28	4	NL12SP	M12 NORDLOCK WASHER LARGE DIAMETER GLUED PAIR	0
29	1	VERSA - SPOOL VALVE		0
30	1	VS6C	AIR MOTOR: GLOBE	0
31	1	SPOOL VALVE BRACKET		0
32	1	SKIS175FA-IEC80 (RATIO 80-1)	NORD SKIS175FA-IEC80 (RATIO 80-1)	0
33	4	CSN EN 24018 - M10x40	SCREW	
34	1	DIN 9021 - 17	WASHER	
35	1	ISO 4018 - M16 x 35	HEX-HEAD BOLT	
36	1	DIN 6885 - A 10 x 8 x 90	PARALLEL KEY	

SCALE	MATERIAL			TITLE OF PART	PART NUMBER
1:7.5				25TE AIR TROLLEY (AT25S)	DRG 1505D-01 1 / 1
	SURNAME	DATE	SIGNATURE		UNLESS OTHERWISE SPECIFIED
DESIGNED BY	TOMASZ	19/04/2013		RED ROOSTER LIFTING	ALL DIMENSIONS ARE IN MILIMETERS
DRAWN BY	E. CRICHTON	29/01/2018		DATE 29/01/2018	TOLERANCES LINEAR UP TO 5 ± 0,05; OVER 5 UP TO 30 ± 0,1; OVER 30 UP TO 120 ± 0,2; OVER 120 UP TO 500 ± 0,25; OVER 500 UP TO 1000 ± 0,5; OVER 1000 ± 1
CHECKED BY				REVISION 0 / WEIGHT 361.6 KG	ANGULAR ± 0,5°
APPROVED BY	B. AITKEN			REPLACES DRAWING	SURFACE ROUGHNESS N10
SHEET SIZE A3	TITLE OF PROJECT 25TE HOIST AND TROLLEY			PROFILE NUMBER	IF IN DOUBT ASK

NAUTA HOUSE, THE MEADOWS
OLDMELDRUM, ABERDEENSHIRE, AB51 0EZ
TEL +44(0)1651 872101
MAIN FAX +44(0)1651 872099
WWW.REDROOSTERLIFTING.COM

REVISION HISTORY		
REV.	DATE	APPROVED
0		

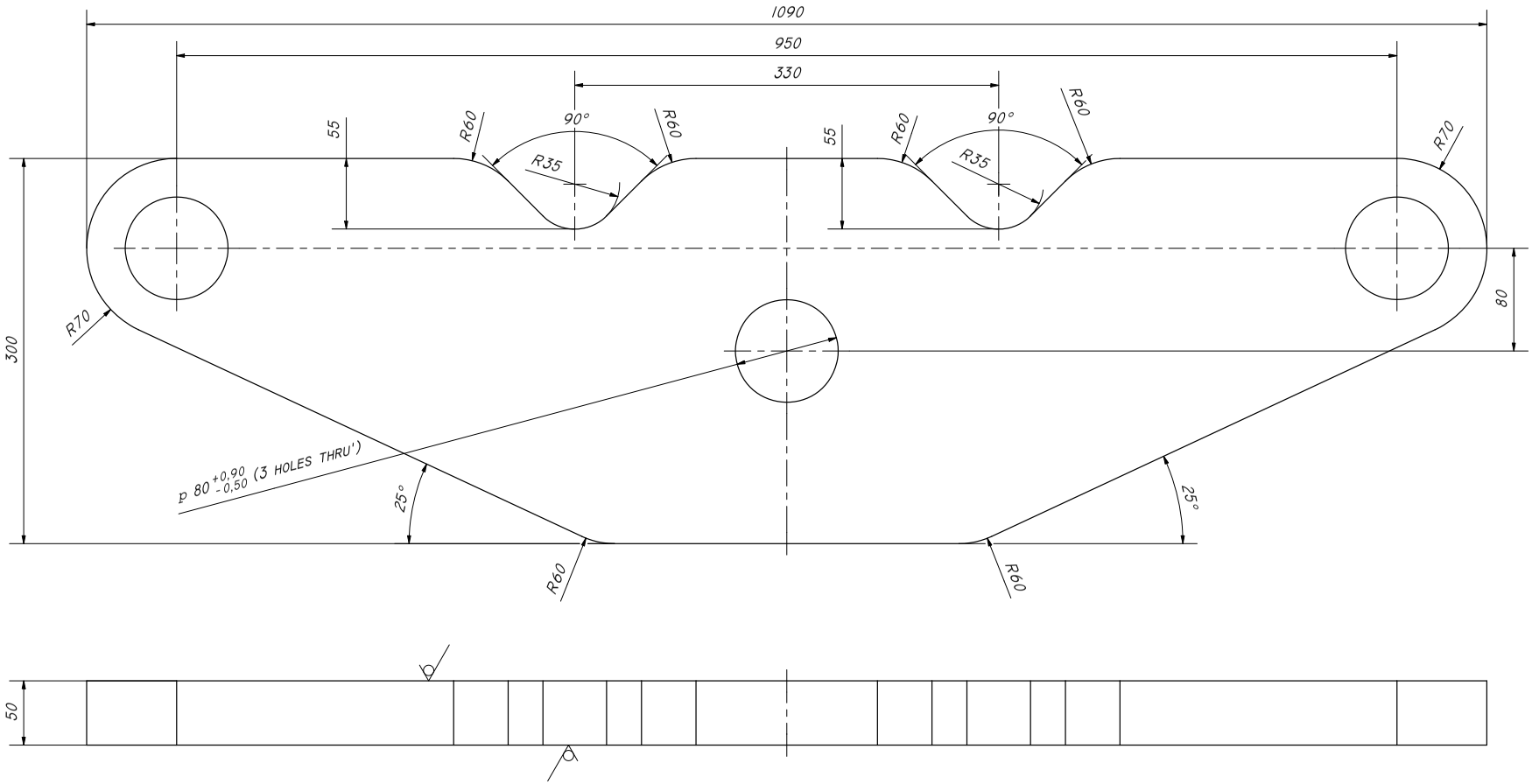

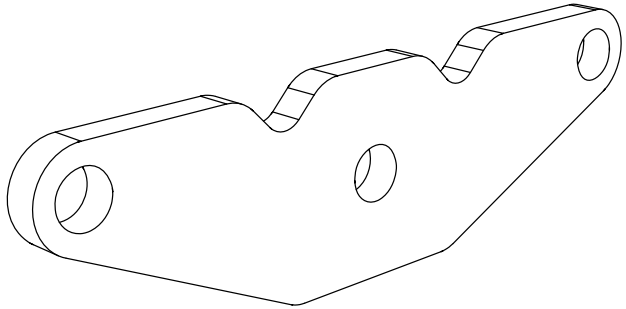

SCALE 1:3.5	MATERIAL S355 J2G3			TITLE OF PART 50TE TANDEM PLATE	PART NUMBER DRG 1506-01 1 / 1
	SURNAME	DATE	SIGNATURE		UNLESS OTHERWISE SPECIFIED
DESIGNED BY	T. MIKOLAJEWSKI	06/03/2013		RED ROOSTER LIFTING	ALL DIMENSIONS ARE IN MILIMETERS
DRAWN BY	E. CRICHTON	28/02/2018			DATE 28/02/2018
CHECKED BY					REVISION 0 / WEIGHT 88.7 KG
APPROVED BY	B. AITKEN				REPLACES DRAWING
SHEET SIZE A3		TITLE OF PROJECT 50TE HOIST AND TROLLEY			PROFILE NUMBER

TOLERANCES
LINEAR
UP TO 5 ± 0,05
OVER 5 UP TO 30 ± 0,1
OVER 30 UP TO 120 ± 0,2
OVER 120 UP TO 500 ± 0,25
OVER 500 UP TO 1000 ± 0,5
OVER 1000 ± 1
ANGULAR ± 0,5°
SURFACE ROUGHNESS N10

IF IN DOUBT ASK

REVISION HISTORY		
REV.	DATE	APPROVED
0		

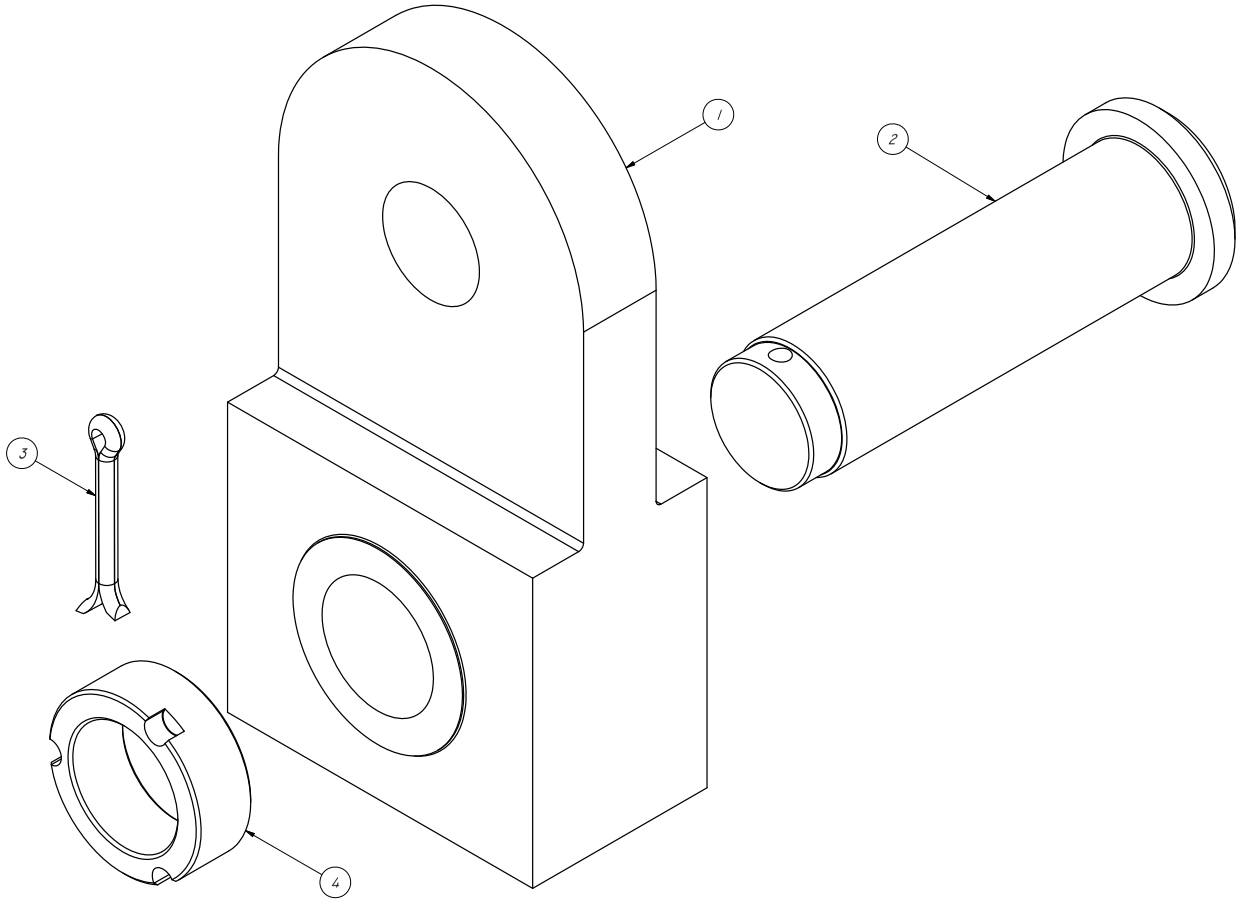

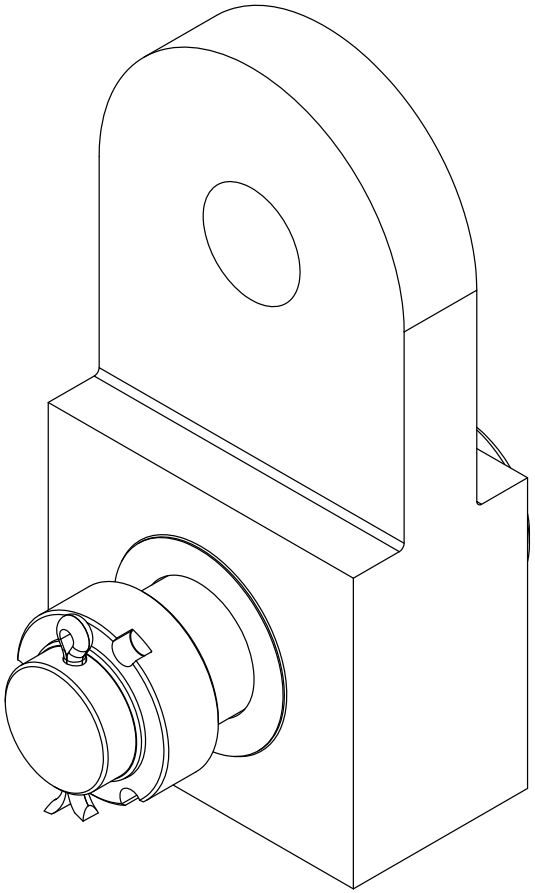

PARTS LIST

ITEM	QTY	PART NUMBER	DESCRIPTION	REV.
1	1	DRG 1506-05	TOP EYE	0
2	1	DRG 1428-22	PIN	0
3	1	DIN EN ISO 1234 - 13x110	SPLIT PIN	
4	1	DRG 1428-23	NUT	0

	SURNAME	DATE	SIGNATURE
DESIGNED BY	T. MIKOLAJEWSKI	07/07/2011	
DRAWN BY	E. CRICHTON	01/03/2018	
CHECKED BY			
APPROVED BY	B. AITKEN		

SCALE: 1:3

MATERIAL:

TITLE OF PART: TOP EYE (FOR TANDEM PLATE) - ASS'BLY

RED ROOSTER LIFTING
NAUTA HOUSE, THE MEADOWS
OLDMELDRUM, ABERDEENSHIRE, AB51 0EZ
TEL. +44(0)1651 872101
MAINTAX +44(0)1651 872098
WWW.REDROOSTERLIFTING.COM

DATE: 01/03/2018

REVISION: 0

WEIGHT: N/A

REPLACES DRAWING:

PROFILE NUMBER:

SHEET SIZE: A3

TITLE OF PROJECT: TNC-50TW/4-AT50-2S

PART NUMBER: DRG 1506-06 / / 1

UNLESS OTHERWISE SPECIFIED
ALL DIMENSIONS ARE IN MILIMETERS
TOLERANCES
LINEAR
UP TO 5 ± 0.05
OVER 5 UP TO 30 ± 0.1
OVER 30 UP TO 120 ± 0.2
OVER 120 UP TO 500 ± 0.35
OVER 500 UP TO 1000 ± 0.5
OVER 1000 ± 1
ANGULAR ± 0.5°
SURFACE ROUGHNESS N10
IF IN DOUBT ASK

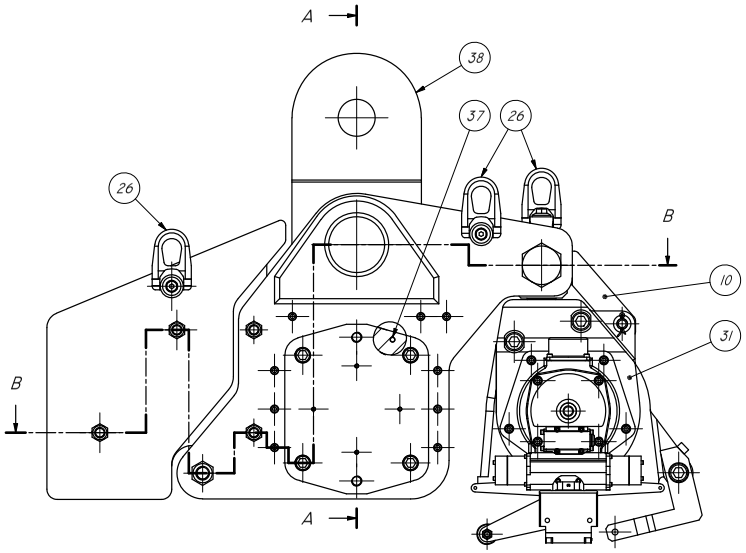

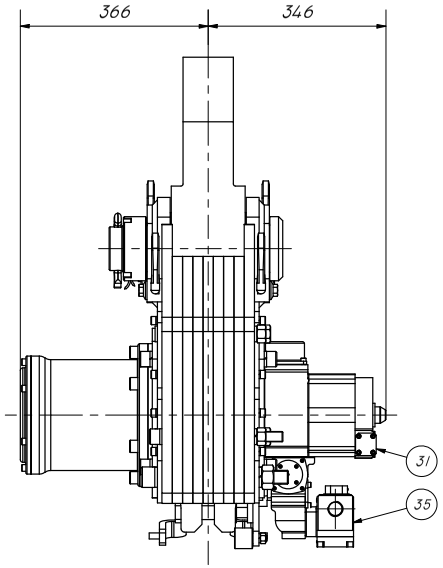

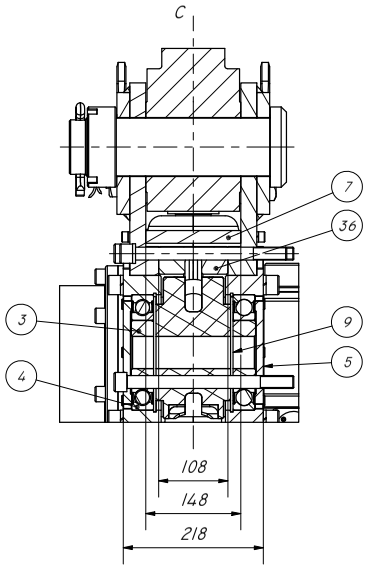

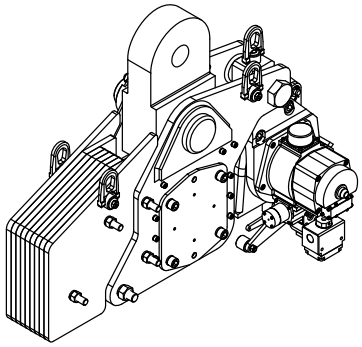

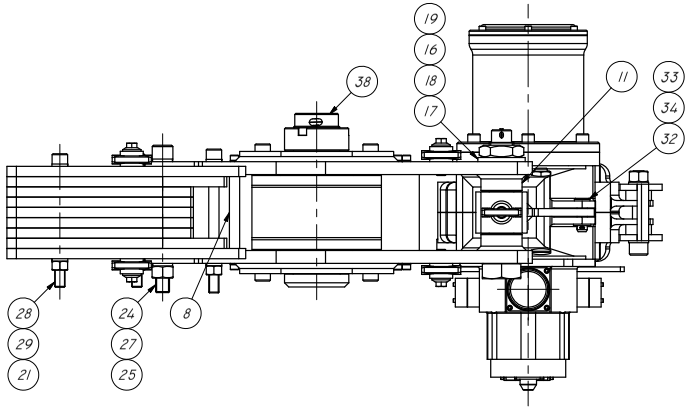

B-B (1:10)

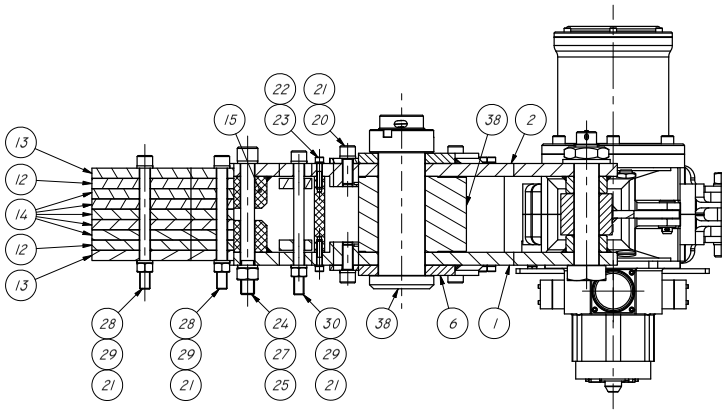

A-A

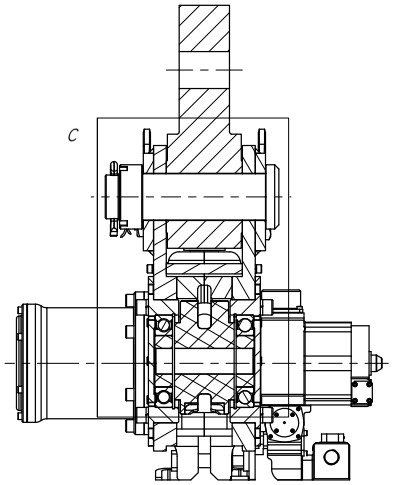

REVISION HISTORY		
REV.	DATE	APPROVED
0		

PARTS LIST

ITEM	QTY	PART NUMBER	DESCRIPTION	REV.
1	1	DRG 1428-02	TNC 50 TW/4 Air Hoist - Top Block Plate I	0
2	1	DRG 1428-03	TNC 50 TW/4 Air Hoist - Top Block Plate II	0
3	2	DRG 1349-03	Idler Pocket Wheel with five pockets (22x66)	0
4	2	6220-2Z	Bearing FAG or SKF	0
5	2	DRG 1428-15	TNC 50 TW/4 Air Hoist - Bearing Housing - Top Block	0
6	2	DRG 1428-14	TNC 50 TW/4 Air Hoist - Butt-Strap	0
7	1	DRG 1428-08	TNC 50 TW/4 Air Hoist - Plate II	0
8	2	DRG 1428-07	TNC 50 TW/4 Air Hoist - Plate I	0
9	2	DIN 472 - 180 x 4	Spring Retaining Ring	
10	1	DRG 1428-17	TNC 50 TW/4 Air Hoist - Rotation Restraint - G.A	0
11	2	DRG 1428-05	TNC 50 TW/4 Air Hoist - Wascher I	0
12	2	DRG 1428-11	TNC 50 TW/4 Air Hoist - Counter Weight Plate I	0
13	2	DRG 1428-12	TNC 50 TW/4 Air Hoist - Counter Weight Plate II	0
14	5	DRG 1428-13	TNC 50 TW/4 Air Hoist - Counter Weight Plate III	0
15	2	DRG 1428-06	TNC 50 TW/4 Air Hoist - Rope Anchor Bosses	0
16	1	DRG 1428-10	Hexagon head bolt - product grades A and B (ISO 4014 - M48 x 320)	0
17	1	ISO 7091 - ST 48 - 100 HV	Plain washers - Normal series - Product grade C	
18	1	ISO 4035 - M48	Hexagon thin nuts (chamfered) - Product grades A and B	
19	1	BS EN ISO 1234 - 6.3x52	Split Pin	
20	8	ISO 4762 - M20 x 55	Hexagon Socket Head Cap Screw	
21	16	IS 6735 - 20	Fasteners - Spring lock washers for screws with cylindrical heads - Specification	
22	18	IS 6735 - 10	Fasteners - Spring lock washers for screws with cylindrical heads - Specification	
23	18	ISO 4762 - M10 x 50	Hexagon Socket Head Cap Screw	
24	1	JIS B 1176 - M27 x 260	Cylinder Head Cap Screw	
25	2	IS 6735 - 27	Fasteners - Spring lock washers for screws with cylindrical heads - Specification	
26	5	DSR M18	DSR - Double swivel rings, High tensile, Class > 8	0
27	1	ISO 4032 - M27	Hexagon nuts, style I - Product grades A and B	
28	2	ANSI B18.3.1M - M20x2.5 x 240	Broached Socket Head Cap Screw - Metric	
29	4	ISO 4032 - M20	Hexagon nuts, style I - Product grades A and B	
30	2	ANSI B18.3.1M - M20x2.5 x 260	Broached Socket Head Cap Screw - Metric	
31	1		TNC-25TWPLE - Top Block	0
32	1	ISO 2341 - B - 20 x 60	Clevis pins with head	
33	1	BS EN ISO 1234 - 5x32	Split Pin	
34	1	ISO 7092 - ST 20 - 140 HV	Plain washers-Small series-Product grade A	
35	1	VPA3165-10	Air Operated Valve - SMC	0
36	2	DRG 1428-16	TNC 50 TW/4 Air Hoist - Chain Guide	0
37	4	ISO 2338 - 10 H8 x 20 - B	Parallel pins of unhardened steel and austentic stainless steel	
38	1	DRG 1428-24	Top Eye	0

Scale	1:10	Material	-
	Surname	Date	Signature
Designed By	Adam Migala	02/02/2010	
Drawn By	E. Crichton	28/02/2018	
Checked By			
Approved By	B. Aitken		
Sheet Size	A3		

Title of Part: Top Block with Shackle Suspension

RED ROOSTER LIFTING
Nauta House, The Meadows
Oldmeldrum, Aberdeenshire, AB51 0EZ
Tel. +44(0)1651 872101
Main Fax: +44(0)1651 872099
www.redroosterlifting.com

Date: 28/02/2018
Revision: 0
Weight: N/A
Replaces Drawing: DRG 1159-01
Profile Number:

Title of Project: TNC 50 TW/4 Air Hoist

Part Number: DRG 1159-30
1 / 1

Unless otherwise specified
All dimensions are in milimeters
Tolerances
Linear
up to 5 ± 0,05
over 5 up to 30 ± 0,1
over 30 up to 120 ± 0,2
over 120 up to 500 ± 0,25
over 500 up to 1000 ± 0,5
over 1000 ± 1
Angular ± 0,5°
Surface Roughness N10
If in doubt ask

REVISION HISTORY		
REV.	DATE	APPROVED
0		

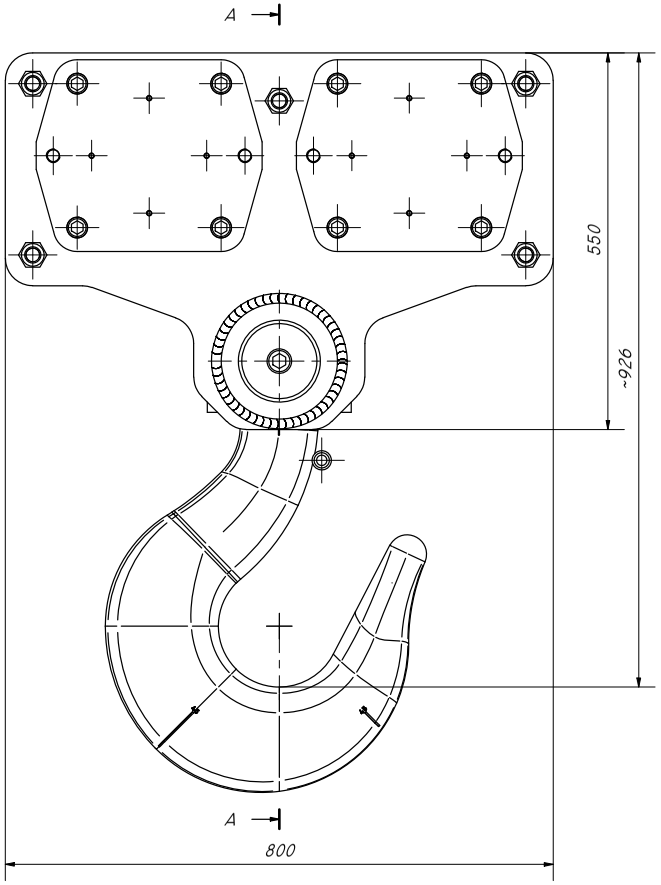

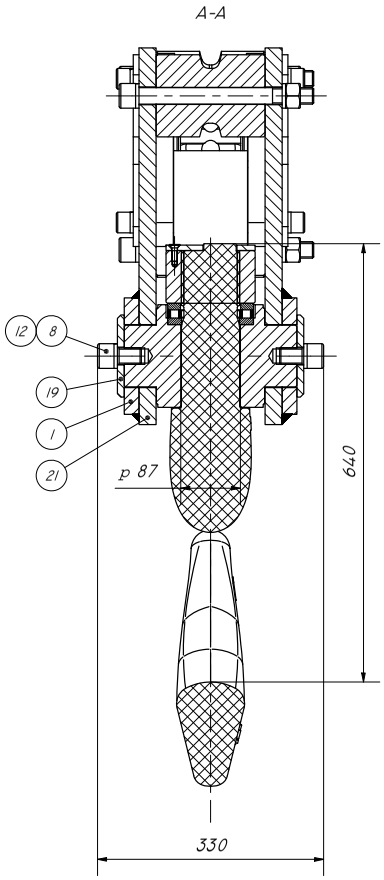

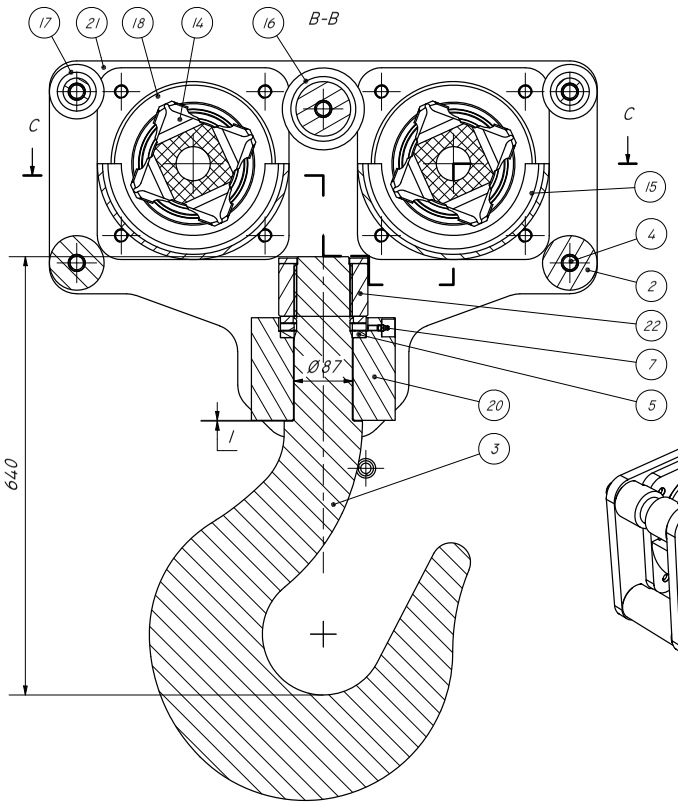

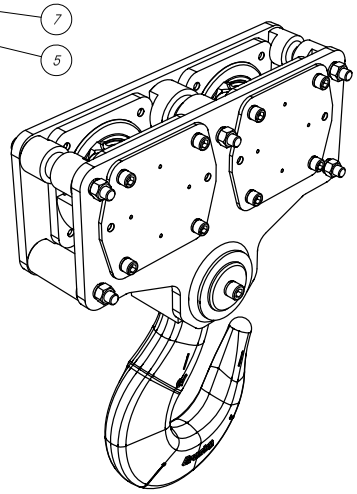

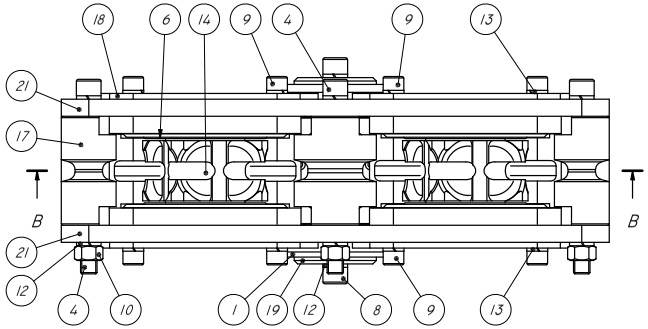

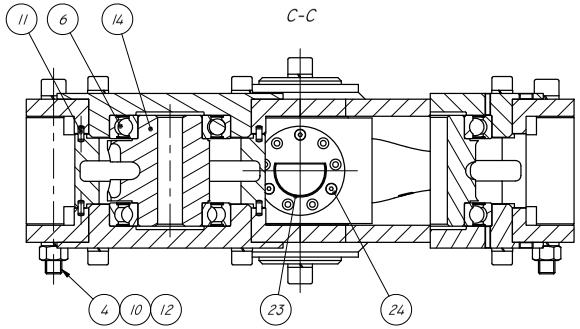

ITEM	QTY	PART NUMBER	DESCRIPTION	REV.	MASS
1	2	DRG 1409-31	TNC 50 TW/4 AIR HOIST - WASHER III	0	2,7 KG
2	2	DRG 1409-30	TNC 50 TW/4 AIR HOIST - SPACER	0	5,1 KG
3	1	DRG 1428-25	HOOK	0	93,9 KG
4	5	ANSI B18.3.1M - M24x3 x 260	BROACHED SOCKET HEAD CAP SCREW - METRIC		1,1 KG
5	1	81217 TN	BEARING FAG OR SKF	0	0,2 KG
6	4	6220-2Z	BEARING FAG OR SKF	0	3,1 KG
7	1	SBHGN A M8 IS 4009 (PART 1)	SPECIFITATION FOR GREASE NIPPLES. PART 1: BUTTON HEAD GREASE NIPPLES TYPE A		0,0 KG
8	2	ISO 4762 - M24 x 40	HEXAGON SOCKET HEAD CAP SCREW		0,3 KG
9	16	ISO 4762 - M20 x 55	HEXAGON SOCKET HEAD CAP SCREW		0,2 KG
10	5	ISO 4032 - M24	HEXAGON NUTS, STYLE 1 - PRODUCT GRADES A AND B		0,1 KG
11	8	ISO 13337 - 10 x 20	SPRING-TYPE STRAIGHT PINS - SLOTTED, LIGHT DUTY		0,0 KG
12	12	IS 6735 - 24	FASTENERS - SPRING LOCK WASHERS FOR SCREWS WITH CYLINDRICAL HEADS - SPECIFICATION		0,0 KG
13	16	IS 6735 - 20	FASTENERS - SPRING LOCK WASHERS FOR SCREWS WITH CYLINDRICAL HEADS - SPECIFICATION		0,0 KG
14	2	DRG 1172-01	POCKET WHEEL 22x66	2	12,1 KG
15	2	DRG 1409-19	TNC 50 TW/4 AIR HOIST - CHAIN GUIDE	0	8,5 KG
16	1	DRG 1409-28	TNC 50 TW/4 AIR HOIST - CENTRE SPACER	0	10,8 KG
17	2	DRG 1409-29	TNC 50 TW/4 AIR HOIST - EDGE SPACER GROOVED	0	4,3 KG
18	4	DRG 1409-22	TNC 50 TW/4 AIR HOIST - BEARING HOUSING - BOTTOM BLOCK	0	18,3 KG
19	2	DRG 1409-26	TNC 50 TW/4 AIR HOIST - COVER	0	0,8 KG
20	1	DRG 1409-27	TNC 50 TW/4 AIR HOIST - TRUNNION BOTOM BLOCK	0	34,4 KG
21	2	DRG 1409-25	TNC 50 TW/4 AIR HOIST - SIDE PLATE BOTTOM BLOCK	0	56,7 KG
22	1	DRG 1428-27	HOOK NUT	0	5,1 KG
23	1	DRG 1428-26	UNSCREWING PREVENTION PLATE	0	0,6 KG
24	3	ISO 10642 - M8 x 25	HEXAGON SOCKET COUNTERSUNK HEAD SCREW-1 - PRODUCT GRADE A		0,0 KG

SCALE 1:7.5	MATERIAL -		TITLE OF PART: BOTTOM BLOCK (HOOK)
	SURNAME	DATE	SIGNATURE
DESIGNED BY	ADAM MIGALA	18/08/2009	
DRAWN BY	E. CRICHTON	05/02/2018	
CHECKED BY			
APPROVED BY	B. AITKEN		
SHEET SIZE A3		TITLE OF PROJECT: TNC 50TW/4 AIR HOIST	

RED ROOSTER LIFTING
NAUTA HOUSE, THE MEADOWS
OLDMELDRUM, ABERDEENSHIRE, AB51 0EZ
TEL +44(0)1651 872101
MAIN FAX +44(0)1651 872098
WWW.REDROOSTERLIFTING.COM

DATE	05/02/2018
REVISION	0
WEIGHT	N/A
REPLACES DRAWING	
PROFILE NUMBER	

PART NUMBER: DRG 1409D-17 / / /

UNLESS OTHERWISE SPECIFIED
ALL DIMENSIONS ARE IN MILIMETERS
TOLERANCES
LINEAR
UP TO 5 ± 0,05
OVER 5 UP TO 30 ± 0,1
OVER 30 UP TO 120 ± 0,2
OVER 120 UP TO 500 ± 0,25
OVER 500 UP TO 1000 ± 0,5
OVER 1000 ± 1
ANGULAR ± 0,5°
SURFACE ROUGHNESS N10
IF IN DOUBT ASK

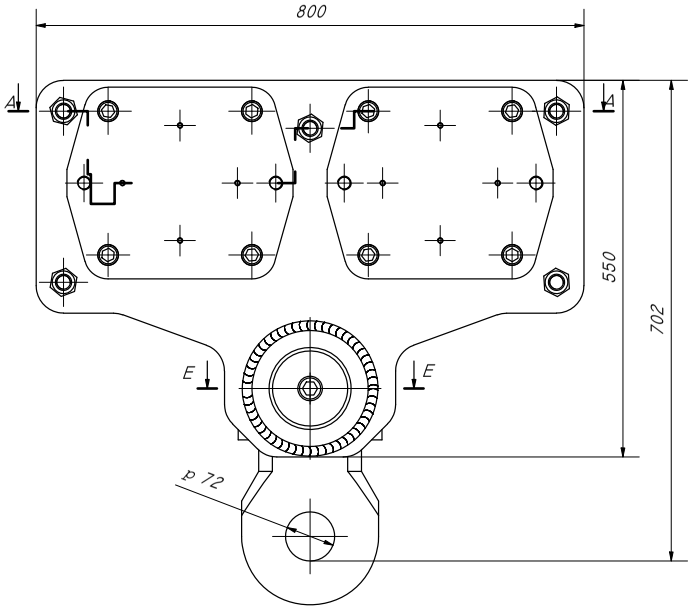

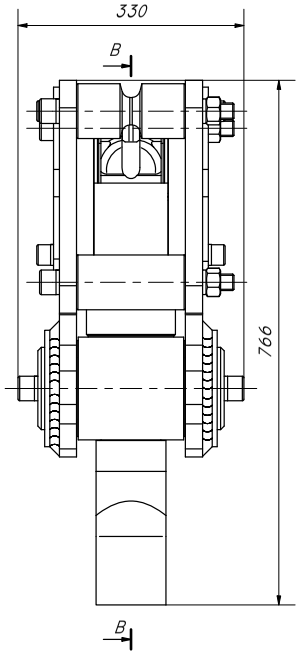

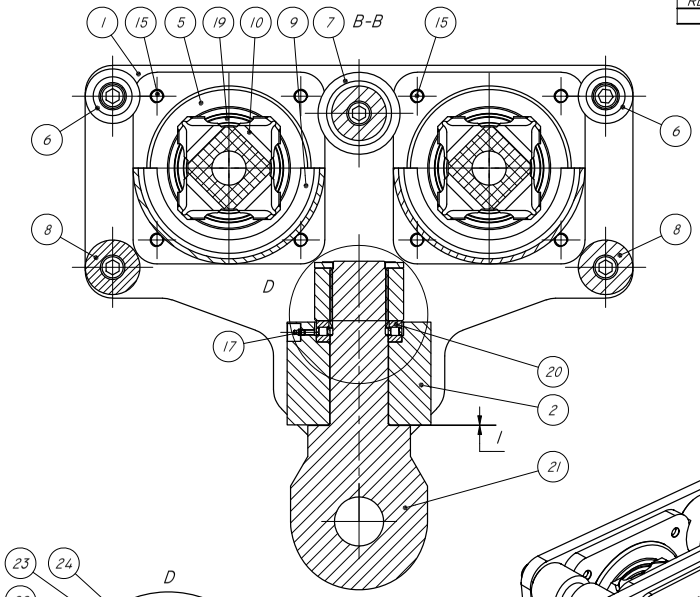

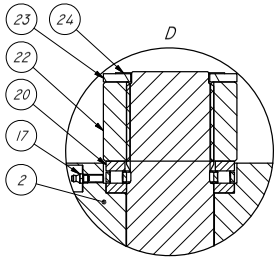

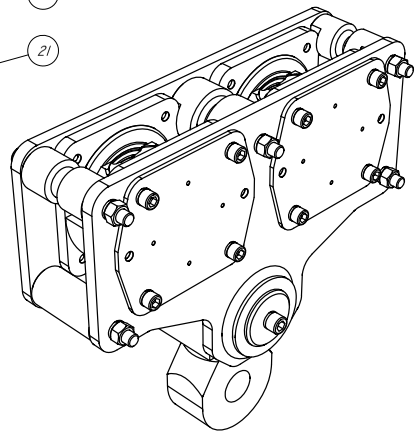

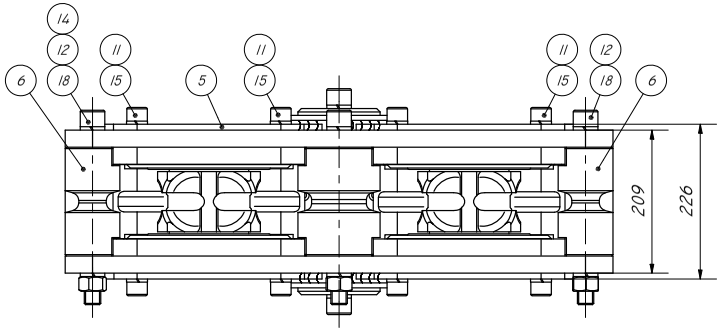

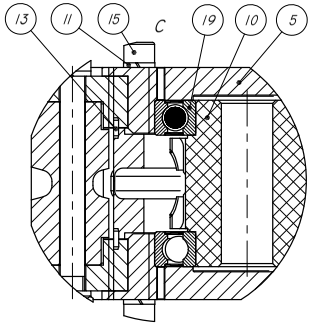

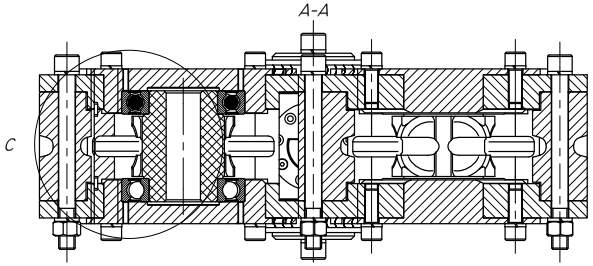

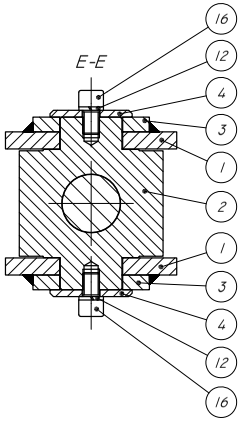

REVISION HISTORY		
REV.	DATE	APPROVED
0		

ITEM	QTY	PART NUMBER	DESCRIPTION	REV.
1	2	DRG 1159-17	TNC 50 TW/4 AIR HOIST - SIDE PLATE BOTTOM BLOCK	2
2	1	DRG 1159-18	TNC 50 TW/4 AIR HOIST - TRUNNION BOTOM BLOCK	3
3	2	DRG 1159-19	TNC 50 TW/4 AIR HOIST - WASHER III	2
4	2	DRG 1159-20	TNC 50 TW/4 AIR HOIST - COVER	2
5	4	DRG 1159-22	TNC 50 TW/4 AIR HOIST - BEARING HOUSING - BOTTOM BLOCK	2
6	2	DRG 1159-23	TNC 50 TW/4 AIR HOIST - EDGE SPACER GROOVED	3
7	1	DRG 1159-24	TNC 50 TW/4 AIR HOIST - CENTRE SPACER	3
8	2	DRG 1159-26	TNC 50 TW/4 AIR HOIST - SPACER	3
9	2	DRG 1159-27	TNC 50 TW/4 AIR HOIST - CHAIN GUIDE	2
10	2	DRG 1172-01	POCKET WHEEL 22X66	0
11	16	IS 6735 - 20	FASTENERS - SPRING LOCK WASHERS FOR SCREWS WITH CYLINDRICAL HEADS - SPECIFICATION	
12	12	IS 6735 - 24	FASTENERS - SPRING LOCK WASHERS FOR SCREWS WITH CYLINDRICAL HEADS - SPECIFICATION	
13	8	ISO 13337 - 10 X 20	SPRING-TYPE STRAIGHT PINS - SLOTTED, LIGHT DUTY	
14	5	ISO 4032 - M24	HEXAGON NUTS, STYLE 1 - PRODUCT GRADES A AND B	
15	16	ISO 4762 - M20 X 55	HEXAGON SOCKET HEAD CAP SCREW	
16	2	ISO 4762 - M24 X 40	HEXAGON SOCKET HEAD CAP SCREW	
17	1	SBHGN A M8 IS 4009 (PART 1)	SPECIFITATION FOR GREASE NIPPLES. PART 1: BUTTON HEAD GREASE NIPPLES TYPE A	
18	5	ANSI B18.3.1M - M24X3 X 260	BROACHED SOCKET HEAD CAP SCREW - METRIC	
19	4	6220-2Z	BEARING FAG OR SKF	0
20	1	81217 TN	BEARING FAG OR SKF	0
21	1	DRG 1159-25_4	BOTTOM EYE	4
22	1	DRG 1428-27	HOOK NUT	0
23	1	DRG 1428-26	UNSCREWING PREVENTION PLATE	0
24	3	ISO 10642 - M8 X 25	HEXAGON SOCKET COUNTERSUNK HEAD SCREW-1 - PRODUCT GRADE A	

SCALE 1:7.5	MATERIAL -		
	SURNAME	DATE	SIGNATURE
DESIGNED BY	ADAM MIGALA	14/07/2009	
DRAWN BY	E. CRICHTON	05/02/2018	
CHECKED BY			
APPROVED BY	B. AITKEN		
SHEET SIZE A3			

TITLE OF PART: BOTTOM BLOCK (SHACKLE)

RED ROOSTER LIFTING
NAUTA HOUSE, THE MEADOWS
OLDMELDRUM, ABERDEENSHIRE, AB51 0EZ
TEL: +44(0)1651 872101
MAIN FAX: +44(0)1651 872209
WWW.REDROOSTERLIFTING.COM

DATE: 05/02/2018
REVISION: 0
WEIGHT: N/A
REPLACES DRAWING
PROFILE NUMBER

TITLE OF PROJECT: TNC 50 TW/4 AIR TROLLEY

PART NUMBER: DRG 1159D-16 / /

UNLESS OTHERWISE SPECIFIED
ALL DIMENSIONS ARE IN MILIMETERS
TOLERANCES
LINEAR
UP TO 5 ± 0.05
OVER 5 UP TO 30 ± 0.1
OVER 30 UP TO 120 ± 0.2
OVER 120 UP TO 500± 0.25
OVER 500 UP TO 1000 ± 0.5
OVER 1000 ±1
ANGULAR ± 0.5°
SURFACE ROUGHNESS NIG
IF IN DOUBT ASK

RED ROOSTER LIFTING

Hoist Body - TNC-50TW/4-AT25-2S
10.11.19

D01-AHT40 REV0

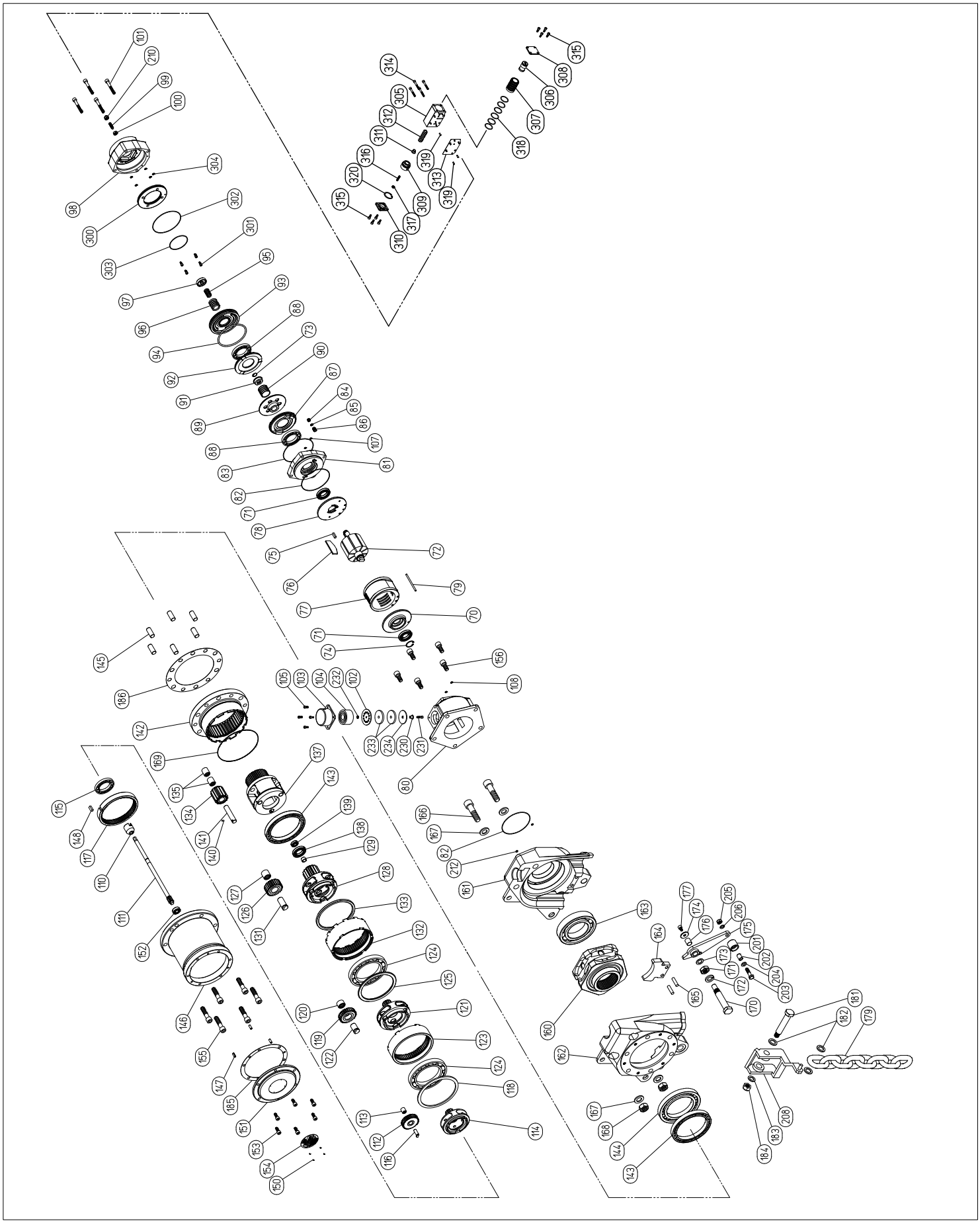

RED ROOSTER LIFTING

Hoist Body - TNC-50TW/4-AT25-2S
10.11.19

D01-AHT40 REV0

Fig. No.	Part Number	Part Name	Parts Per Hoist
070	426301K70	FRONT PLATE	1
071	130106008	BEARING 6007ZZ	2
072	426301K40	ROTOR	1
073	130302020	RETAINING RING S-20	1
074	130302035	RETAINING RING S-35	1
075	130408110	BRAKE WHEEL KEY	1
076	137102012	VANE	8
077	426301K50	CYLINDER	1
078	426301K20	REAR PLATE	1
079	130402008	CYLINDER KNOCK	1
080	426307K80	MOTOR CASE	1
081	426307N30	MOTOR COVER	1
082	131103063	O-RING S-135	2
083	131103064	O-RING S-140	1
084	426301W30	BRAKE VALVE	2
085	131103007	O-RING S-9	2
086	130802272	BRAKE VALVE SPRING	2
087	426301W80	BRAKE SHIFTER (M)	1
088	130116011	BEARING 16011	2
089	426301P30	BRAKE DISC	1
090	130802273	SHIFTER SPRING	1
091	426301W70	SHIFTER SPRING SEAT	1
092	426301W90	BRAKE SHIFTER(S)	1
093	426301Q70	BRAKE PISTON	1
094	131101077	O-RING P-130	1
095	130802274	BRAKE SPRING (S)	1
096	130802275	BRAKE SPRING (L)	1
097	426301B70	BRAKE SPRING SEAT	1
098	426307P20	BRAKE CASE	1
099	132310035	HEX SOCKET HEAD SET SCREW M10X35	1
100	426301Q90	HEX NUT M10	1
101	131710085	HEX SOCKET HEAD SET CREW M10X85	4
102	426303AU1	EXHAUST PLATE	1
103	426301Q61	EXHAUST COVER	1
104	137402052	SILENCER (SL)	1
105	131706014	HEX SOCKET HEAD CAP BOLT M6X14	4
107	131103004	O-RING S-6	2
108	131101004	O-RING P-6	2
110	426305L20	COUPLING	1
111	426305L30	PINION	1
112	426305L80	FIRST IDLE GEAR	3
113	130131220	NEEDLE BEARING TA-1220	3
114	426305M10	FIRST FRAME	1
115	130116011	BEARING 16011	1
116	426305M20	FIRST IDLE GEAR SHAFT	3
117	426305L90	FIRST INTERNAL GEAR	1
118	426305L40	CONED DISC SPRING	1
119	426301M40	SECOND IDLE GEAR	3
120	130132520	NEEDLE BEARING TA2520	3

Fig. No.	Part Number	Part Name	Parts Per Hoist
121	426301M70	SECOND FRAME	1
122	426301M50	SECOND IDLE GEAR SHAFT	3
123	426301M60	SECOND INTERNAL GEAR	1
124	130116024	BEARING 16024	2
125	426301K60	INTERNAL GEAR SPACER	1
126	426301N40	THIRD IDLE GEAR	3
127	130132530	NEEDLE BEARING TA2530	3
128	426305N71	THIRD FRAME	1
129	426305AD0	PINION SPACER	1
131	426301N50	THIRD IDLE GEAR SHAFT	3
132	426301N60	THIRD INTERNAL GEAR	1
133	426305N91	THIRD INTERNAL GEAR SPACER	1
134	426305V41	LAST IDLE GEAR	3
135	130132130	NEEDLE BEARING TA2030Z	6
137	426305V62	LAST FRAME	1
138	130104008	BEARING 6007	1
139	130106003	BEARING 6002ZZ	1
140	130406005	PARALLEL PIN 4X10	3
141	426305V71	LAST IDLE GEAR SHAFT	3
142	426305V81	LAST INTERNAL GEAR	1
143	131112830	BEARING 6830	2
144	130126026	BEARING 6026DDU	1
145	426305L61	KNOCK PIN	6
146	426305N80	GEAR CASE	1
147	130608020	SPRING PIN 8X20	3
148	130408111	INTERNAL GEAR KEY	1
150	133001110	RIVET 0X3.2	4
151	426305N20	GEAR COVER	1
152	130107003	BEARING 6202	1
153	131710025	HEX SOCKET HEAD CAP SCREW M10X25	6
154	137301035	NAME PLATE 25 TON	1
155	131716070	HEX SOCKET HEAD CAP SCREW M16X70	6
156	131716035	HEX SOCKET HEAD CARP SCREW M16X35	5
160	426305R22	LOAD SHEAVE	1
161	426305D51	SIDE PLATE (M)	1
162	426305D61	SIDE PLATE (G)	1
163	130126220	BEARING 6220DDU	1
164	426305R40	CHAIN SEPARATOR	1
165	130406045	SPRING PIN 12X45	2
166	131724090	HEX SOCKET HEAD CAP SCREW M24X90	2
167	131310024	SPRING WASHERM24	4
168	134401024	HEX NUT M24	2
169	131103195	O-RING S-195	1
170	426305X60	CHAIN SET SPINDLE	1
171	134403024	HEX NUT M24	1
172	131310024	SPRING WASHER M24	1
173	131307020	WASHER M20	1
174	426305W60	LIMIT LEVER THRUST PLATE	1

RED ROOSTER LIFTING

Hoist Body - TNC-50TW/4-AT25-2S
10.11.19

D01-AHT40 REV0

Fig. No.	Part Number	Part Name	Parts Per Hoist
175	426305R61	LIMIT LEVER	1
176	130220025	DU BUSH MB2025DU	1
177	131710015	HEX SOCKET HEAD CAP SCREW M10X15	1
179	AHC22/80	CHAIN 22mm	HOL
181	426305X81	CHAIN END PIN	3
182	131306024	WASHER M24	3
183	131307020	WASHER M20	1
184	134501020	U-NUT M20	1
185	136102100	GEAR COVER PACKING (N)	1
186	136102139	INTERNAL GEAR PACKING (N)	1
201	426305F20	LIMIT ROLLER	1
202	426305F30	LIMIT SPACER	1
203	131612050	HEX BOLT M12X50	1
204	131307012	PLAIN WASHER M12	1
205	134401012	HEX NUT M12	1
206	131301012	SPRING WASHER M12	1
208	426305AC0	LIMIT LEVER (D)	1
210	134415010	DOMED CAP NUT M10	1
212	131103006	O-RING S8	2
230	426303AW0	SCREW GUIDE	1
231	131706225	HEX SOCKET HEAD CAP SCREW M6X25 (SUS)	1
232	134501006	U-NUT M6	1
233	137402053	SILENCER (C)	2
234	137402054	SILENCER (F)	1
300	426307AL0	CHAMBER CAP	1
301	131706014	HEX SOCKET HEAD CAP SCREW M6X14	4
302	131103063	O-RING S-135	1
303	131103051	O-RING S-85	1
304	131103005	O-RING S-7	5
305	426307AM0	VALVE BOX	1
306	426307AN0	LIMIT SPOOL	1
307	426307AP0	LIMIT BUSHING	1
308	426307AQ0	BOX COVER	1
309	426307AR0	LIMIT RETAINER	1
310	426307AS0	ADJUST COVER	1
311	426307Z50	SPRING SEAT	1
312	130802276	SPRING 13X64X2	1
313	136102170	LIMIT GASKET	1
314	131705040	HEX SOCKET HEAD CAP SCREW M5X40	4
315	131705014	HEX SOCKET HEAD CAP SCREW M5X14	8
316	132306025	HEX SOCKET SET SCREW M6X25	1
317	134403006	HEX NUT M6	1
318	131103022	O-RING S-28	6
319	130406005	PARALLEL PIN 4X10 (H7)	3
320	130301032	RETAINING RING H-32	1

RED ROOSTER LIFTING

Built-In Mains Emergency Stop Valve Pendant Body - TNC-50TW/4-AT25-2S
13.05.21

D01-AHT40 REV0

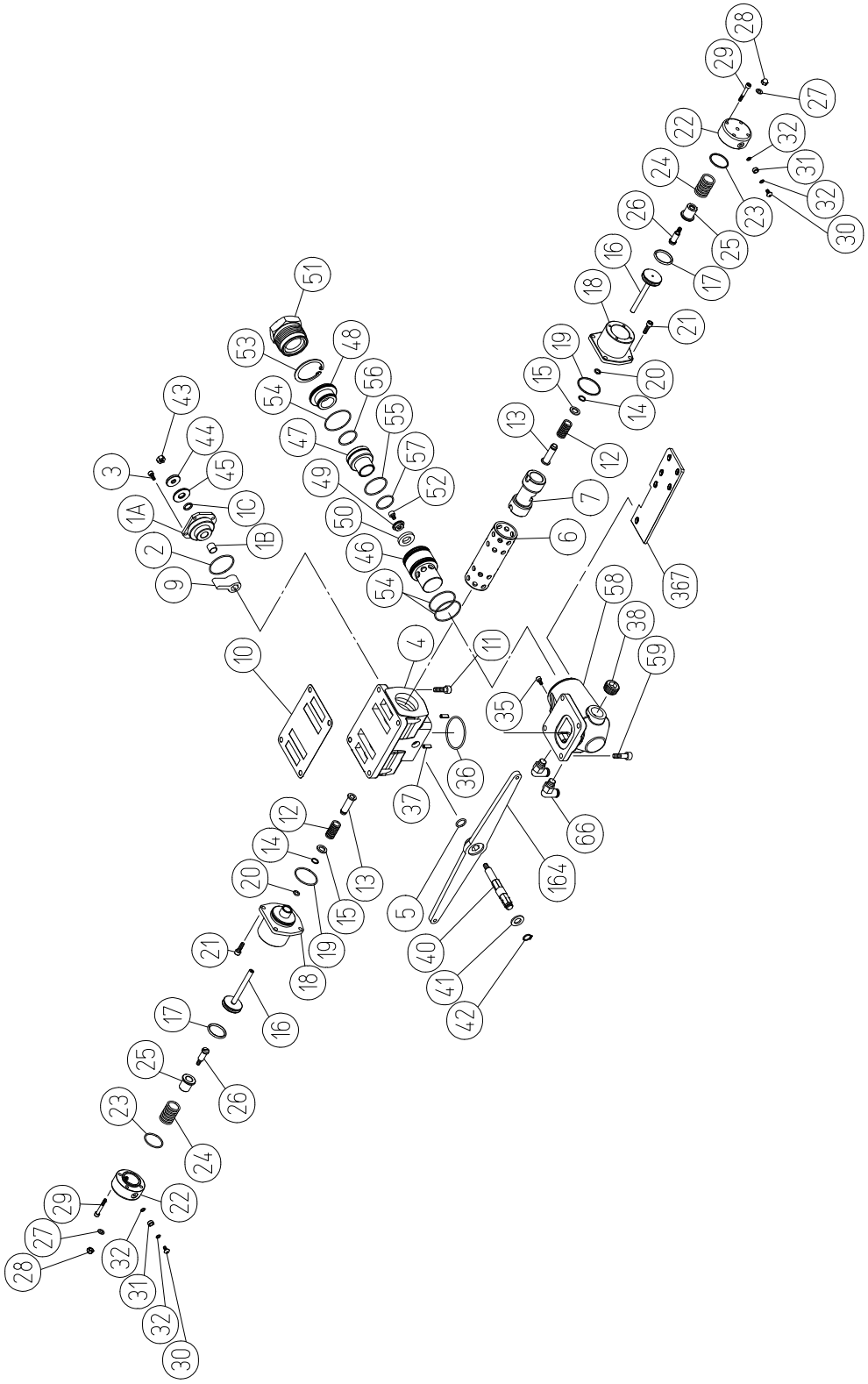

▪ Red Rooster Lifting Limited ▪ Nauta House, The Meadows, Oldmeldrum, Aberdeenshire, AB51 0EZ ▪ Tel: +44 (0) 1651 872101 ▪

RED ROOSTER LIFTING

Built-In Mains Emergency Stop Valve Pendant Body - TNC-50TW/4-AT25-2S
13.05.21

D01-AHT40 REV0

Fig. No.	Part Number	Part Name	Parts Per Hoist
001A	426305J90	METAL BUSH	1
001B	130212012	DU BUSH	1
001C	131101012	O-RING P-12	1
002	131103035	O-RING S-44	1
003	131705012	HEX SOCKET HEAD CAP CREW M5X12	4
004	426307A50	VALVE BODY	1
005	131151015	O-RING P-15	1
006	426301A60	VALVE BUSH	1
007	426301A70	THROTTLE VALVE	1
009	426301J80	VALVE SHAFT LEVER	1
010	136102097	VALVE BODY PACKING	1
011	131708025	HEX SOCKET HEAD CAP SCREW M8X25	4
012	130802270	THROTTLE VALVE SPRING (S)	2
013	426301G20	SPRING GUIDE (S)	2
014	130307011	CIR-CLIP WR-11 (SW-11)	2
015	426301R80	SPRING THRUST PLATE	2
016	426301F80	PISTON	2
017	131151028	O-RING P-29	2
018	426301B30	VALVE CAP	2
019	131103033	O-RING S-40	2
020	131151006	O-RING P-8	2
021	131706020	HEX SOCKET HEAD CAP SCREW M6X20	8
022	426301C80	CAP COVER	2
023	131103026	O-RING S-32	2
024	130802271	THROTTLE VALVE SPRING (L)	2
025	426301B50	SPRING SEAT	2
026	426301B60	CAP COVER	2
027	136102095	DICE READ	2
028	134402006	HEX NUT M6	2
029	131705035	HEX SOCKET HEAD CAP SCREW M5X35	8
030	426221G50	ELEMENT HOLDER	2
031	136302010	ELEMENT	2
032	136102094	PACKING	4
035	131705010	HEX SOCKET HEAD CAP SCREW M5X10	1
036	131117138	O-RING AS568-138	1
037	130606015	SPRING PIN 6X15	2
038	134901106	GM PLUG PT3/4	1
040	426305T70	LIMIT VALVE SHAFT	1
041	131307012	PLAIN WASHER M12	1
042	130302012	RETAINING RING S-12	1
043	134401008	HEX NUT M8	1
044	426305V30	LIMIT VALVE SHAFT WASHER	1
045	426305G80	VALVE SHAFT THRUST PLATE	1
046	426307BA0	MAIN CUT BUSHING	1
047	426307BB0	MAIN CUT VALVE	1
048	426307BC0	MAIN CUT CAP	1
049	426307BD0	MAIN CUT HOLDER	1
050	136102168	MAIN CUT SEAT	1
051	426307BFB	INLET BUSHING CP	1

Fig. No.	Part Number	Part Name	Parts Per Hoist
052	131706208	HEX SOCKET HEAD CAP SCREW M8X28	4
053	130301052	RETAINING RING H-52	1
054	131117032	O-RING AS568-032	3
055	131103033	O-RING S-40	1
056	131103026	O-RING S-32	1
057	131103024	O-RING S-30	1
058	426307AX0	MAIN CUT BODY	1
059	131708028	HEX SOCKET HEAD CAP SCREW M8X28	4
066	135106002	JOINT PL6-02	2
164	426303S2F	CONTROL LEVER CP	1
367	DRGPB-01	PENDANT BRACKET	1

RED ROOSTER 4 STATION PENDANT - RRI-VTP4M

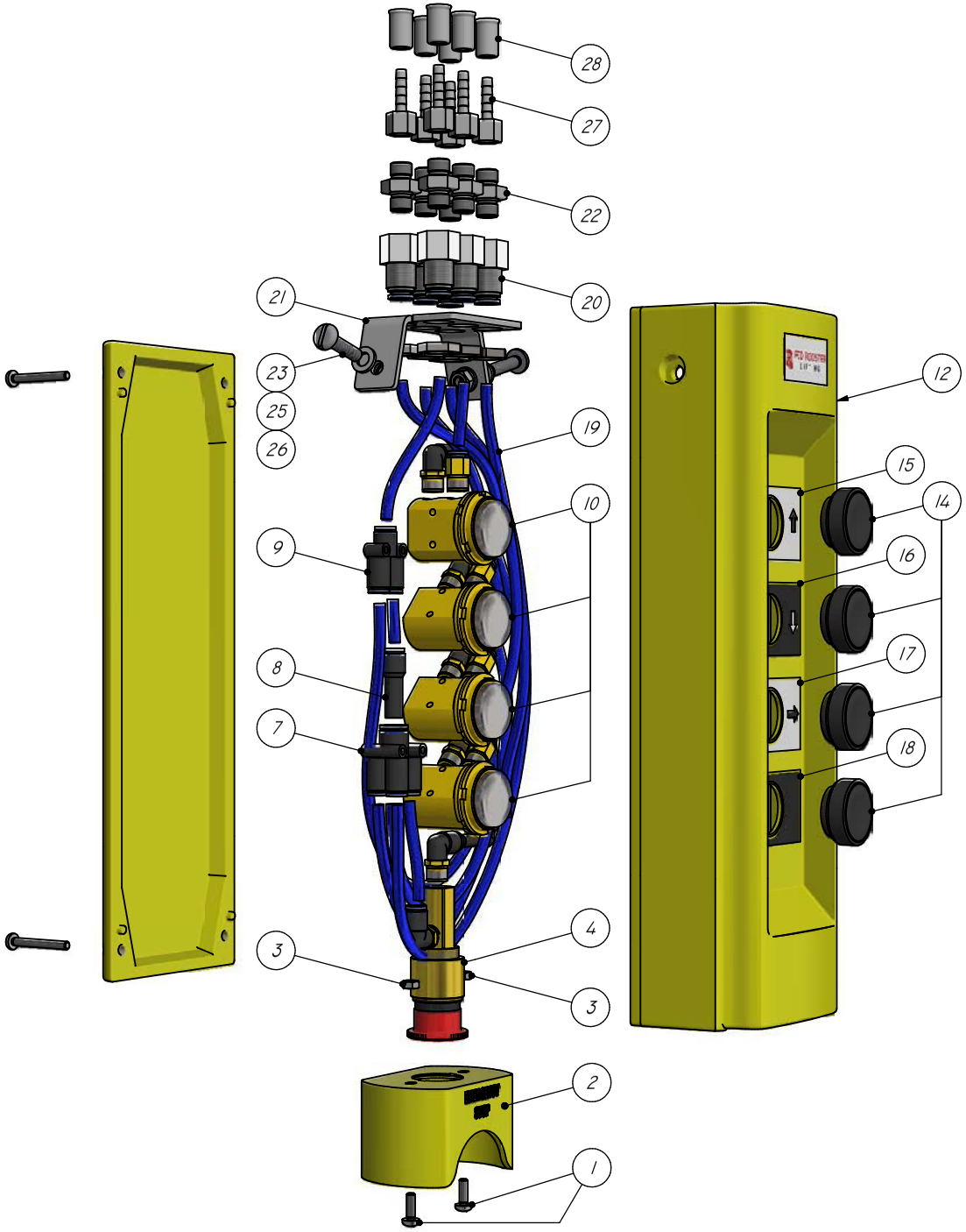

ITEM	PART NO.	DESCRIPTION	QTY
1	105P	M4 x 20 SCREW HEAD	4
2	E/STOP/GUARD01	GUARD FOR EMERGENCY STOP	1
3	133/1P	M4 NYLOCK NUT	4
4	BIK3206P-BS54	EMERGENCY STOP BUTTON	1
5	304P	1/8” TO 6mm BANJO	6
6	P118	90º ELBOW 6mm	2
7	P112	4 WAY JUNCTION	1
8	301P	8mm to 6mm REDUCER	1
9	P080	“Y” BRANCH	1
10	BIK-3209-P-VALVE	PENDANT VALVE	4
11	P087	1/8” TO 6mm PUSHFIT	4
12	TP/4/HOUS/M	4 STATION PENDANT	1
14	BIK-3209-294-BCOVER	COVER FOR BIK VALVES	4
15	XAC-B-LEGEND-UP	UP LEGEND	1
16	XAC-B-LEGEND-DOWN	DOWN LEGEND	1
17	XAC-B-LEGEND-RIGHT	RIGHT LEGEND	1
18	XAC-B-LEGEND-LEFT	LEFT LEGEND	1
19	HP7	6mm SMC TUBE	6
20	P245	1/8” TO 6mm BULKHEAD AND NUT	6
21	DRG 2652-04	PLATE	1
22	P071/1	1/8” BSP NIPPLE C/W CONE	6
23	122P	M6 x 20 HEX BOLTS	2
25	139P	M6 NYLOC NUT	2
26	145P	M6 WASHER	4
27	P016/1	1/8” BSP SWIVEL TO 1/4” HOSE TAIL	6
28	P002/1	1/4” HOSE FERRULES	6

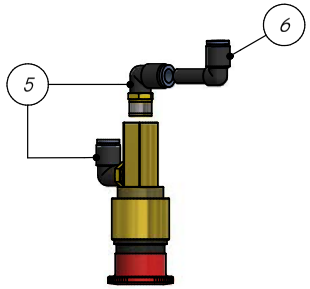

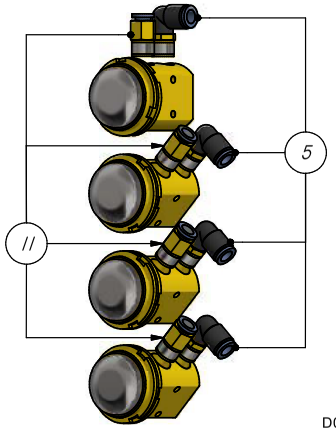

D01-P4 REV0

Air Motor
Globe VS6C

PARTS LIST			
ITEM	QTY	NAME	DESCRIPTION
1	1	Body	
2	1	Rotor Shaft Assy	
3	1	End Plate	
4	1	Front Plate D80	
5	1	Cover Plate	
6	1	Gasket I	
7	1	Gasket II	
8	1	Gasket III	
9	1	Seal Housing	
10	2	Ejection Ring	
11	4	Blade	
12	1	SKF 2Z6203-2Z	Deep groove ball bearings single row with two Z shields SKF
13	1	DIN 472 - 40x1.75	Retaining rings for bores
14	3	ISO 4018 - M5 x 12	Hex-Head Bolt
15	4	ISO 2338 - 5 h8 x 16 - B	Parallel Pin
16	6	DIN 912 - M6 x 20	Cylinder Head Cap Screw
17	6	DIN 912 - M6 x 16	Cylinder Head Cap Screw
18	1	SKF 2Z3205 A-2Z	Angular contact ball bearings double row with shields SKF
19	1	ISO 3601-1 - B 0475 G	Fluid power systems - O-ring
20	1	DIN 3760 - A - 25 x 35 x 7	Shaft Seal Ring
21	3	DIN 7991 - M5x12	Hexagon socket countersunk head cap screws
22	1	DIN 6885 - A 6 x 6 x 28	Parallel Key

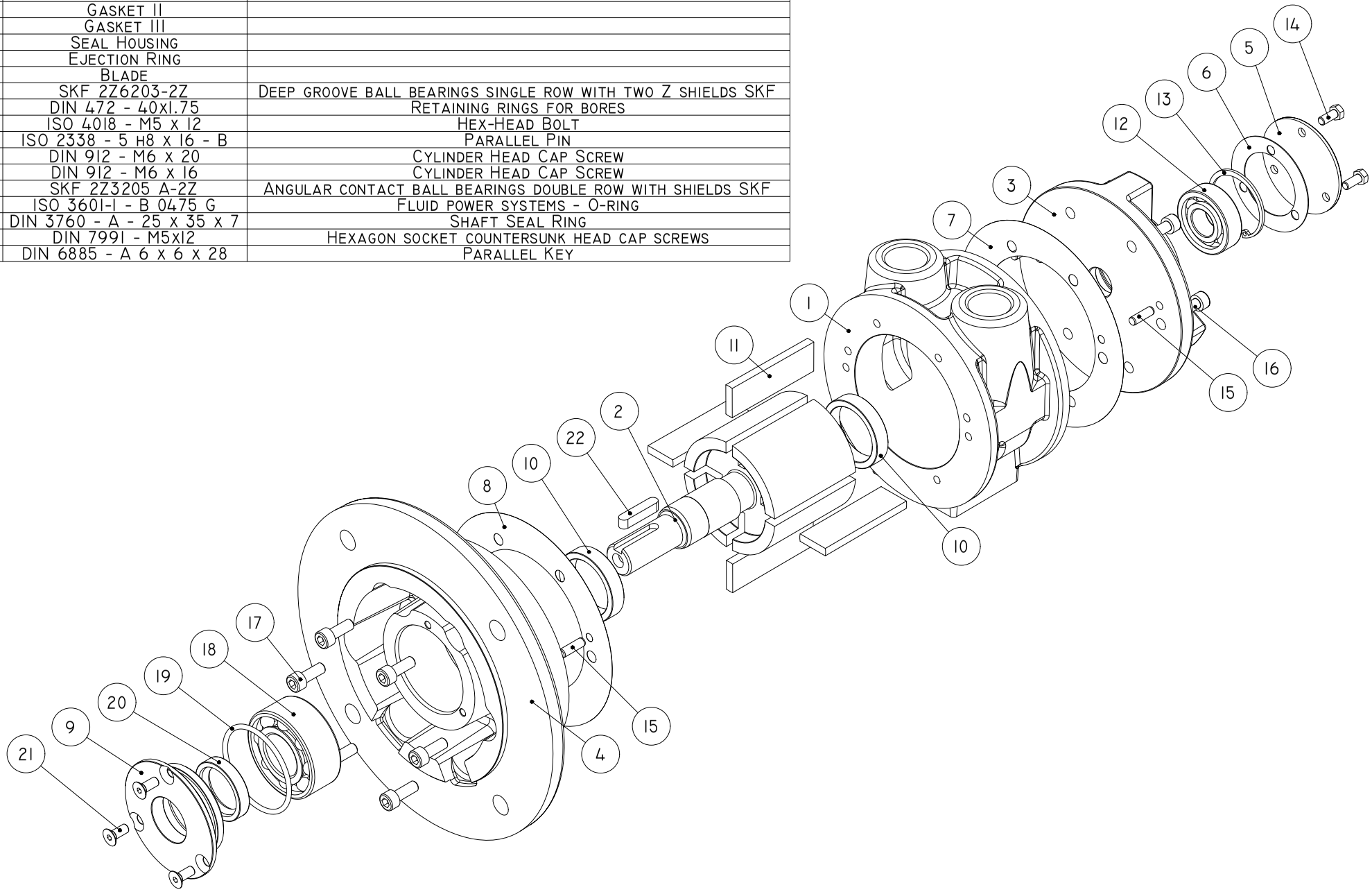

• Red Rooster Lifting Limited • Nauta House, The Meadows, Oldmeldrum, Aberdeenshire, AB51 0EZ • Tel: +44 (0) 1651 872101 •

4 WAY VALVES 5/2 and 5/3

Four-Way Valves are generally used to control double acting cylinders. They function to alternately direct pressure to one of two outlets at the same time exhausting pressure from the opposite outlet.

NOMINAL PRESSURE RANGE

Series "V": partial vacuum to 200 psi (14 bar)
pneumatic **Series "T":** 0-500 psi (35 bar) hydraulic

ACTUATION

MANUAL, MECHANICAL, PILOT
or SOLENOID-PILOT

BODY TYPES:

All Series "V" & "T" Four-Way Valves are available in the two body types described below. Actuators used with either body type are completely interchangeable.

HOW TO SELECT A VERSA VALVE

Every letter and digit in the product number has a significant meaning. The product number shown below (VJJ-4503) indicates the following

V	J	J	-	4	5	0	3
VALVE SERIES	ACTUATING DEVICES ON LEFT END OF VALVE LOOKING AT INLET	ACTUATING DEVICES ON RIGHT END OF VALVE LOOKING AT INLET		FUNCTIONAL TYPE OF VALVE	VALVE PORT SIZE	BODY DETAILS	SPOOL DETAILS (FLOW PATTERNS)
V Series "V" Valve Pneumatic service to 200 psi (14 bar)	**J Pilot Spring Centreing** (for 3 position pilot operated valves)	**J Pilot Spring Centreing** (for 3 position pilot operated valves)		**4** Four-Way	***5** 1/2" NPT ***6** 3/4" NPT ***7** 1" NPT *Basic valve size	**0** SIDEPORTED-EXPILOT Body with integral, pipe threaded ports. This type of body is directly connected to pressure lines and is used for mechanical, manual nad EXPilot* type solenoid or pilot actuated valves.	**THREE-WAY VALVES** **3** Three Position All ports blocked in centre position.

PILOT

The pilot actuator is a small cylinder and piston that is an integral part of the valve and which, when pressurized or unpressurized, actuates the valve.

TYPE "P" PRESSURE PILOT (for 2-position valves) [60]

TYPE "J" PRESSURE PILOT (for 3-position valves) [61]

This pilot requires pressure to actuate the valve, and release of the pressure to return the valve. Usually it is controlled by a small Three-Way valve. The pilot port on the ⅛" through ½" valves may be rotated to any position in 90° increments from vertical. (See option arrangements below).

When used in pairs for 2-position valves, it is not necessary to maintain pressure on the actuated pilot in order for the valve to remain in actuated position. Valve will remain in last position until signalled by the opposite pilot to return. When used with spring centering feature ("J"), valve will remain in center position until actuated by either pilot. To remain in actuated position, pilot must remain pressurized until it is required for valve to return to center position.

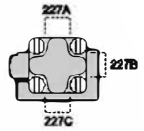

STANDARD POSITION OF PILOT INLET

OPTIONS

Pilot actuated valves (⅛" thru ½") are supplied with the pilot port facing the same direction as the inlet port of the valve proper. Three other positions are available (Suffix-227A thru -227C). To order simply include the suffix number shown.

Example: VSP-4302-227A.

PIILOT ACTUATED VALVES DIMENSIONS

SINGLE PILOT

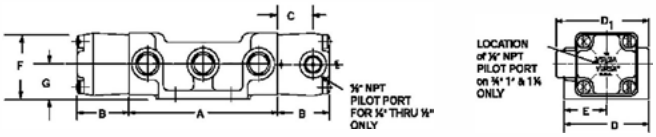

DOUBLE PILOT

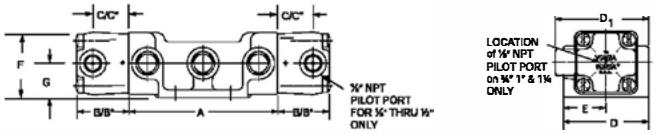

SIZE	A		B		B*		C		C*		D1		D		E		F		G	
	In	mm	In	mm	In	mm	In	mm	In	mm	In	mm	In	mm	In	mm	In	mm	In	mm
1/8-1/4	3.5	89	1.22	31	2.13	54	0.84	21	1.73	44	2.19	56	2	51	1	25	1.5	38	0.81	21
3/8-1/2	5.75	146	1.22	31	2.13	54	0.84	21	1.73	44	2.69	66	2.75	70	1.36	35	1.69	43	0.66	22
3/4-1-1¼†	8.5	216	2.06	52	3.53	90	—	—	—	—	—	—	3.75	95	1.88	48	2.44	62	1.25	32

*Dimensions for Spring-Centering Valves

HOW TO SELECT A VERSA VALVE

Every letter and digit in the product number has a significant meaning. The product number VPA3165-10 shown below shows the following:

VPA3	1	6	5	-	10
VALVE SERIES	PILOT №	BODY SIZE	BODY TYPE		PORT SIZE
Air Operated Valve Pneumatic Pilot Spring Centreing	Single	1	Body Ported		10 1”

VPA3165-06

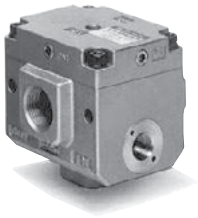

VPA3145-03

Specifications

Fluid	Air	
Type of actuation	N.C. only (N.O. only for vacuum)	
Operating pressure range	For vacuum and low pressure	For ordinary pressure
	–101.2 kPa to 0.2 MPa	0.2 to 0.8 MPa
Pilot pressure range	Refer to the graph of pilot pressure.	
Ambient and fluid temperature (˚C)	0 (No freezing) to 60	
Lubrication	Required (Turbine oil, Class 1 ISO VG32 equivalent)	
Mounting orientation	Free	
Impact/Vibration resistance (m/s^2) Note)	150/50	

Note) Impact resistance: No malfunction from test using drop impact tester, to axis and right angle directions of main valve, each one time when pilot signal ON and OFF. (Value in the initial stage)
Vibration resistance: No malfunction from test with 45 to 1000 Hz one sweep, to axis and right angle direction of main valve, each one time when pilot signal ON and OFF. (Value in the initial stage)

DIMENSIONS - VPA3165-10

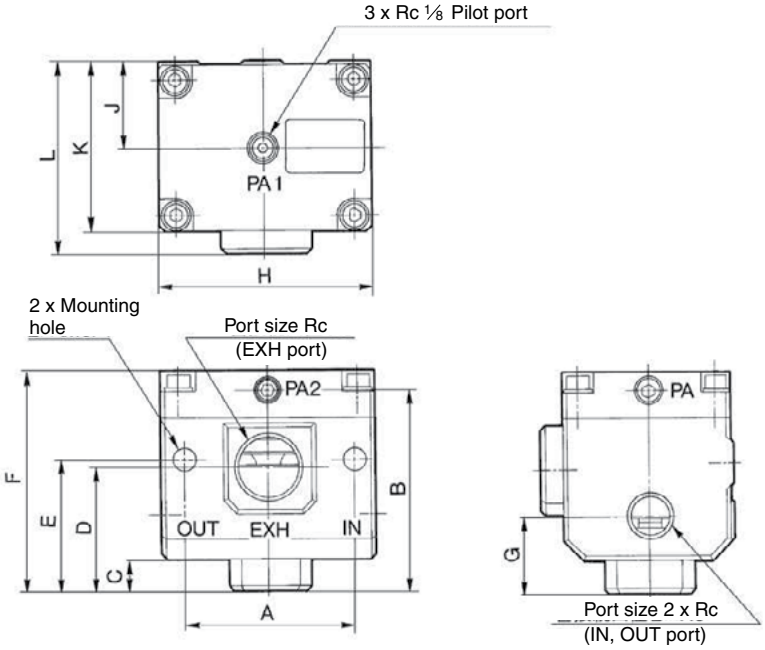

MODEL	PORT SIZE		A	B	C	D	E	F	G	H	J	K	L	MOUNTING HOLE
	IN/OUT	EXH												
VPA3165-10	1”	1 1/4	82.6	110	17	68	75	118	45	113	36	71	95	Ø8.5

▪ Red Rooster Lifting Limited ▪ Nauta House, The Meadows, Oldmeldrum, Aberdeenshire, AB51 0EZ ▪ Tel: +44 (0) 1651 872101 ▪

HOW TO SELECT A VERSA VALVE

Every letter and digit in the product number has a significant meaning. The product number VSP-3701-2B shown below shows the following:

V	S	P	-	3	7	0	1
VALVE SERIES	ACTUATING DEVICES ON LEFT END OF VALVE LOOKING AT INLET	ACTUATING DEVICES ON RIGHT END OF VALVE LOOKING AT INLET		TYPE OF VALVE	VALVE PORT	BODY DETAILS	SPOOL DETAILS
V Series "V" Valve Pneumatic service to 200 psi (14 bar)	S SPRING RETURN Spring pushes valve spool	P PRESSURE PILOT Two positsion		3 THREE-WAY	7 1" NPT	0 SIDEPORTED-EXPILOT Body with integral, pipe threaded ports. This type of body is directly connected to pressure lines and is used for mechanical, manual nad EXPilot* type solenoid or pilot actuated valves.	1 Normally Closed

Valve model to suit: TNC10TWLPE, TNC-15TW/3, TNC-20TW/4, TNC-25TW, TNC-37.5TW, TNC-50TW/4

DIMENSIONS - VSP-3701

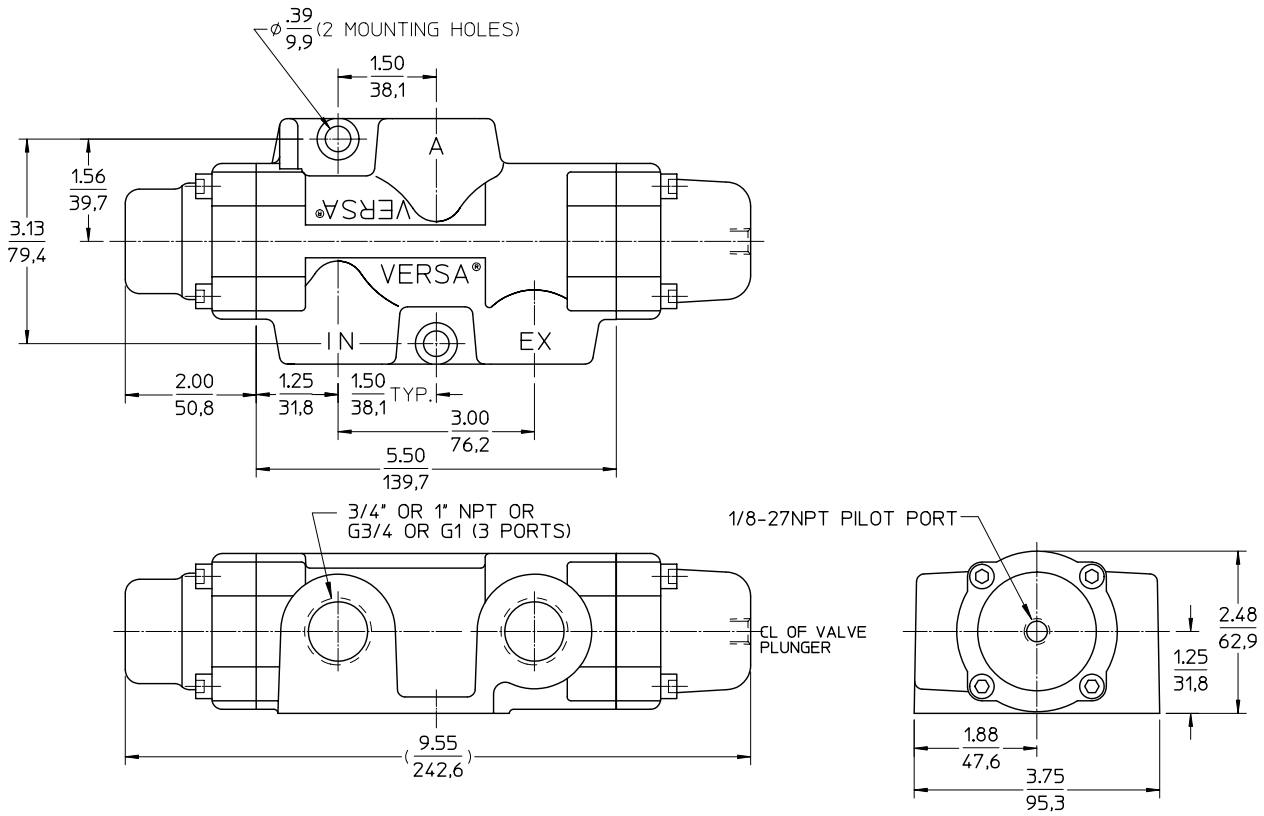

ACCESSORIES

ACCESSORIES

MAINS EMERGENCY STOP VALVES

ON TCR and TNC model hoists the mains valve can either be internal or mounted external to the hoist. As a mains emergency stop valve we use a range of 3/2 normally closed valves on pendant control hoists. These range from 0.5” to 1.5” depending on the hoist capacity but with the latest hoists having the valves built into the hoist they are only required on cord conversion to pendant hoists on hoists manufactured before 2014.

Valve models: 0.5” = VSA 3135-04, 0.75” = VSA3145-06, 1” = VPA 3165-10
ATEX version 0.75” = X773.32.11.1C, 0.75” = VJJ4306/2B, 1” = VJJ4703-2B

PILOT VALVE

These valves are used on TCR hoists where the pendant length is more than 10 metres long. The valves are opened by the control air from the pendant opening the valve allowing full pressure to open the hoist spool valve.

Valve model: SYJA712-01

DUMP VALVES

On hoists fitted with 1/4” air hose in place of tubes, dump valves are fitted to the control lines to reduce operating delays.

Valve model: DV/0.25

FILTER SILENCING - TYPE AMC

This ensures clean plant air and reduces noise levels.

In areas where you do not want the exhaust air / oil to go freely into the atmosphere we can either pipe the exhaust air away to another room, fit a filter silencer unit, or a combination of both using the exhaust pipe with a filter silencer on the end of the hose.

- The filter removes 99.9% of oil from the exhaust air.
- The noise level is also reduced by the silencer and also with the exhaust noise.
- Temperature range 5°C to 60°C.
- The exhaust hose and filter should be at least one size larger than the incoming air supply hose.
- The exhaust cleaner must be mounted vertically.
- If the oil drop level decreases or after a period of 1 year the filter element.

AMC

Construction/Dimensions

Male thread

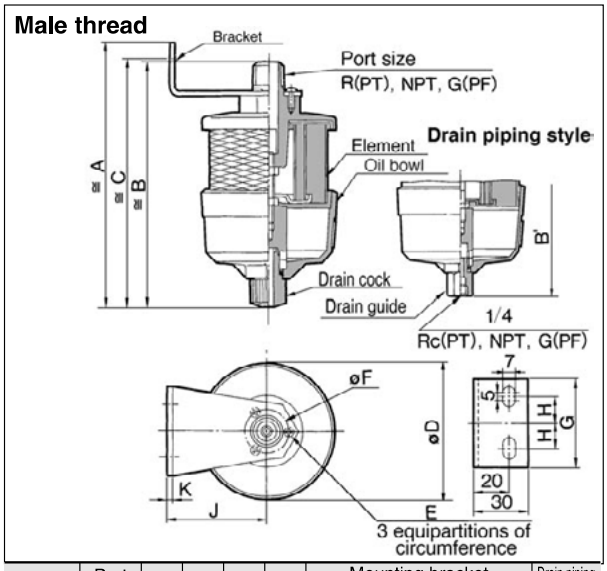

Model	Port size	A	B	C	D	Mounting bracket						Drain piping
						E	F	G	H	J	K	B'
AMC310	3/8	150.5	138.5	140.5	75	M3 Depth	24	50	15	55	2.3	141.5
AMC510	3/4	203.5	196.5	193.5	102	M4 Depth	40	70	20	70	3.2	199.5
AMC610	1	229.5	224.5	219.5	118	M4 Depth	48	70	20	80	3.2	227.5
AMC810	1 1/2	–	270	–	135	–	–	–	–	–	–	273
AMC910	2	–	327	–	153	–	–	–	–	–	–	330

Female thread

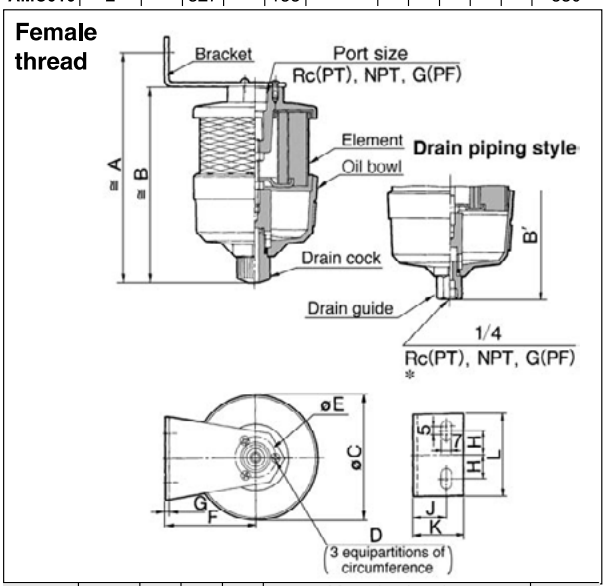

Model	Port size	A	B	C	Mounting bracket								Drain piping
					D	E	F	G	H	J	K	L	B'
AMC220	1/4	100	88	56	M3 Depth	22	40	2.3	15	12	20	50	73*
AMC320	1/4, 3/8	140.5	120.5	75	M3 Depth	24	55	2.3	15	20	30	50	123.5
AMC520	1/2, 3/4	193.5	173.5	102	M4 Depth	40	70	3.2	20	20	30	70	176.5

* On the AMC220, an R(PT)1/4 fitting can be attached by removing the drain cock.

Flow Characteristics

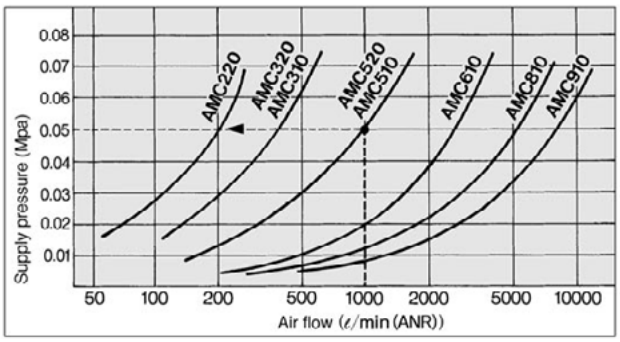

How to view the diagram: If the AMC510 is operated at a flow volume of 1000 ℓ/min (ANR), the supply pressure will be 0.05MPa.

⚠Precautions

Design

⚠Warning

① The exhaust port could become blocked by the clogging of the exhaust cleaner. Therefore, make sure to provide a safe design so as not to cause the whole system to malfunction.

⚠Caution

① If this will be used with a centralized piping system, calculate the **peak** maximum air consumption by including the actuators that operate simultaneously and the capacity of the piping that is connected. Then, select a model so that the calculated value will be less than the maximum flow volume of the **exhaust cleaner.** (Select a style with ample capacity because the exhaust speed will decrease when the **element** becomes clogged.)

② The silencing effect could vary depending on the pneumatic circuit or the pressure that is used.

③ Operate at a back pressure (Supply pressure) of 0.1MPa or less.

④ The attached bracket is for supporting the exhaust cleaner body. Thus, it cannot support the piping or other items. If these items need to be supported, provide an additional support.

Mounting

⚠Caution

① An exhaust cleaner must be mounted vertically. If it is mounted diagonally, laterally, or inverted, the oil that is separated by the element will splash on the surroundings.

Maintenance

⚠Caution

① If the exhaust speed drops and the system performance decreases due to clogging, replace with a new element. Make sure to verify the operating condition of the actuator at least once a day.

② The replacement interval for the element is before the internal pressure during exhaust reaches 0.1MPa or after 1 year of operation, whichever comes first.

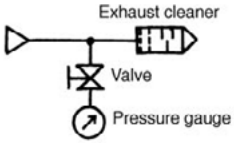

- Provide a branch on the supply side of the exhaust cleaner to mount a valve and a pressure gauge.
- During inspection, open the valve and check the pressure at the time of exhaust discharge. (The **valve** must remain closed except for inspection. The pressure gauge could break if the valve remains open.)

AIR SERVICE EQUIPMENT

An air set should be used with all Red Rooster hoists and trolleys.

AIR SERVICE UNITS:

The correct size of air service unit for each hoist type is stated in the table on page 4. The air service unit must be installed with the lubricator unit down line from the filter unit. The unit should be installed at the hoist inlet port or within eight metres of inlet port. (Siting the unit further away or well below the hoist will result in lubricant being deposited on the internal walls of the supply line and hence it will be necessary to increase the lubricant rate above the levels specified (see section 1.2) to ensure adequate lubrication of the hoist. The ambient temperature range is -5°C to +60°C (with no freezing).

FILTER UNIT (WATER TRAP)

Manual drain units
As the name implies, these units must be drained by the operator as the filter bowl becomes full of water. The frequency of draining is entirely dependent upon the usage of the hoist and the moisture level of the air supply. ⚠ **CAUTION**

In clean environments e.g. laboratories, paint spray booths, manual drain filters are essential to prevent contamination.

Automatic drain units
These units are automatically self-purging. When the filter bowl is full it will automatically drain itself. Although very convenient to the user, the unit must be sited such that either the purged water is captured by a tray or it purges into an area away from personnel, equipment (particularly electrical equipment) and goods. If contamination from purged water is not a problem then automatic drain units should be selected.

Failure to fit and drain the filter will result in excessive moisture being carried into the hoist valve, motor and brake actuator resulting in internal corrosion and premature failure. ⚠ **DANGER**

LUBRICATOR UNIT

There are two types of lubricator available.

Oil mist lubricator
The preferred type, and essential where the lubricator must be sited some distance from the hoist. The unit produces atomised oil particles which remain in suspension in the air longer.

Droplet Lubricator
Due to the larger particle size of the droplets, these may only be used where the lubricator is close to the coupled hoist.

Failure to fit a lubricator and maintain the correct oil flow will result in rapid wear of the rotor vanes within the motor, excessive heat generation and failure of the air motor within a very short period. ⚠ **DANGER**
Keep the lubricator topped up with a light turbine oil. ⚠ **DANGER**

WORKING PRINCIPLE AND ADJUSTMENT

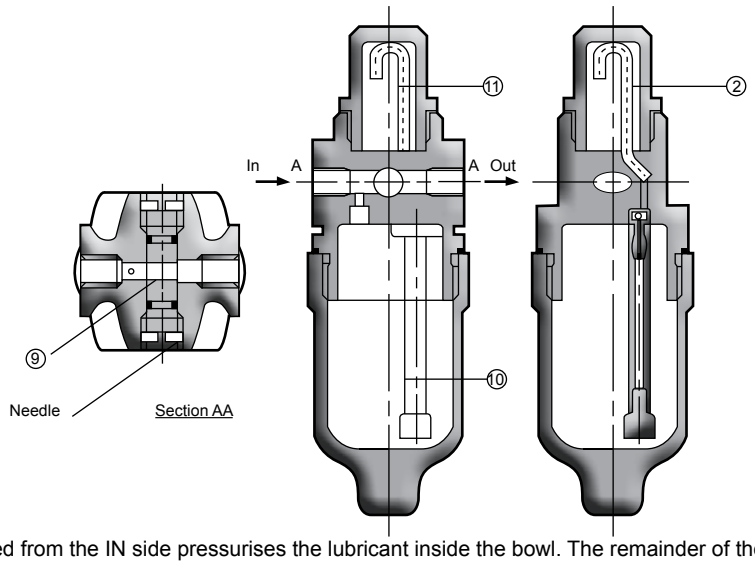

A portion of the air introduced from the IN side pressurises the lubricant inside the bowl. The remainder of the air passes through the needles (9), and flows to the OUT side. The pressure differential between the inside of the bowl and the inside of the sight dome (2), causes the lubricant inside the bowl into the oil passage (10). The lubricant drips from the dripping tube (11), and lubricate the OUT side. The amount of lubricant is adjusted by the needle (9), on the front face. Turning the needle clockwise increases the amount of lubricant, and turning it counter clockwise until fully opened shuts off the lubricant. The needle on the side that is not used should be left fully opened.

REGULATOR UNIT

Most compressors are supplied with a regulator on the ouput. However, where a number of different pneumatic tools are supplied from the same compressor it is good practice to maintain the supply line or remain at a higher pressure and to fit a regulator to the supply at each tool.

The operating pressures stated for the air hoist are the pressures required at the hoist inlet manifold. Subject to the type of airline, a pressure drop in the line between 0.1 and 0.35 bar (2 and 5 p.s.i) per 10 metres of line should be anticipated (as a result of the frictional resistance of the walls).

MOUNTING / ADJUSTMENT - WARNING

1. Set the regulator while verifying the displayed values of the inlet and outlet pressure gauges. Turning the regulator knob excessively can cause damage to the internal parts.
2. Do not use tools on the pressure regulator knob as this may cause damage. It must be operated manually.

MOUNTING / ADJUSTMENT - CAUTION

1. Be sure to unlock the knob before adjusting the pressure and lock it after setting the pressure. Failure to follow this procedure can cause damage to the knob and the outlet pressure may fluctuate.

▷ Pull the pressure regulator knob up to unlock. (You can visually verify this with the ‘orange mark’ that appears in the gap.)

▷ Push the pressure regulator knob down to lock. When the knob is not easily locked, turn it left and right a little and then push it. (When the knob is locked, the ‘orange mark’, i.e. the gap will disappear.)

2. Pulsation will generate when the difference between the inlet and the outlet pressure is large. In this case, reduce the pressure difference between the inlet and the outlet. Please consult with SMC if pulsation problem is not resolved.

3. When the bowl is installed, install them so that the lock button lines up to the groove of the front (or the back) of the body to avoid dropping or damage of the bowl.

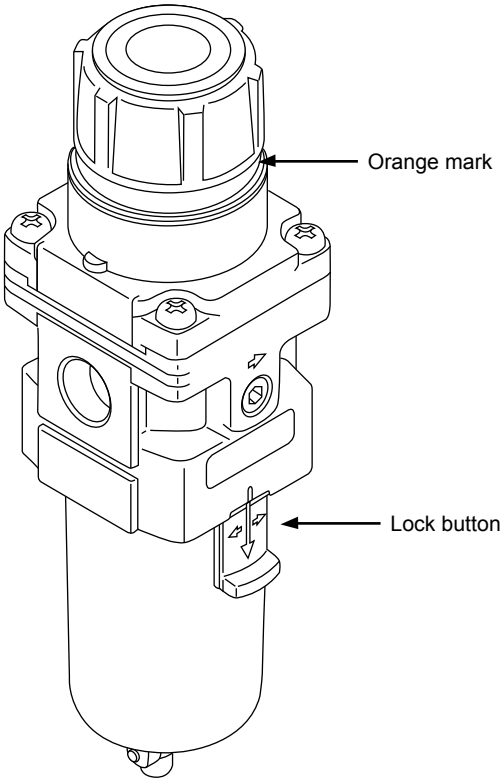

Image for illustration purposes only

LOG BOOK

PNEUMATIC HOIST AND TROLLEY INSPECTION REQUIREMENTS

Pneumatic hoists, trolleys and overhead cranes should be inspected as specified in the 'Supply of Machinery (Safety) Regulations 2008 and The Provision of Use of Powered Machinery (PUWER) S12306 sections 5 & 6 and the results recorded in the log book.

External inspection by a competent person every 12 months or as per the examination scheme. The Lifting Operations and Lifting Equipment Regulations S12306 - 1998.

DAILY OR SHIFT INSPECTION

At the same time each day at the start of each working day of shift operator should carry out a basic inspection of the equipment, its operation and lubrication as required.

MONTHLY OR 3 MONTHLY CHECKS

Depending on the frequency of use and the working conditions, inspection and maintenance should be done at suitable intervals to ensure any deterioration of the equipment will be detected and remedied in good time.

ANNUAL INSPECTION

A competent person with the requisite knowledge of the equipment should carry out a full inspection of powered lifting equipment every 12 months or after any exceptional circumstances which could jeopardize the safety of the lifting equipment. A report should be issued and sent to the customer / employer.

DAILY HOIST AND TROLLEY INSPECTION REQUIREMENTS

The items listed below are intended as a guide for performing daily visual inspections of the components that have a direct bearing on the safety of the hoist and or trolley where the status may change with day to day use. The equipment items listed below do not necessarily need to be restricted to these items, but they should form the basis of the inspection.

OPERATING CONTROLS:	Check for malfunction, excessive wear, broken or damaged components and control function labels.
HOIST CHAIN:	Check chain lubrication, twisted chains (multi fall blocks).
AIR SET:	Check oil level indicator.
SAFETY CATCHES:	Check operation and for damage.
NOISE / OPERATION:	Check for any unusual noise and speeds during function tests.
HOIST OPERATION:	Check the hoist starts and stops quickly.

EXTRA CHECKS FOR TROLLEY

OPERATION:	Check movement and control of the trolley (no load).
TROLLEY MOVEMENT:	Check the trolley moves smoothly along the beam.

PNEUMATIC HOIST AND TROLLEY MAINTENANCE REQUIREMENTS

TO BE CARRIED OUT MONTHLY OR THREE MONTHLY DEPENDING ON THE HOIST WORKING CONDITIONS

DAMAGE:	External inspection of hoist for damage or wear.
HOIST CHAIN:	Check chain lubrication, twisted chains (multi fall blocks) and excessive wear or damaged chain links. (Light mineral oil).
HOOKS:	Check hooks swivel, hook opening and safety catch.
AIR SET:	Check and fill up lubricator bowl and adjust drop rate as required.
FITTINGS/HOSES:	Check all air-line fitting are secure and there are no air leaks.
BOLTS:	Check security of bolts, chain collector and chain anchor.
AIR MOTOR:	Check air motor and silencers - replace as required.
OPERATION:	Function test hoists running speed and control operation without load and then check lifting a load of around 50% of SWL to check brake operation and controls when loaded.
LIMIT SWITCHES:	Check operation of upper and lower limits at slow speed.

EXTRA CHECKS FOR TROLLEY

RUNWAY BEAM:	Check the beam is smooth and flat without obstruction and that the end stops are in place and secure.
DIVE PINION:	Check drive pinion and wheels are fitting correctly and not worn, grease if required.
ADJUSTMENT:	Check flange adjustment, anti tilt roller setting, load bar nuts - adjust or tighten if required,
AIR LINES:	Check security of control lines and supply hoses and fittings.
OPERATION:	Function test over the complete range of travel.
SUPPLY HOSES:	Check air lines are supported and the weight is not hanging from the air set.
TROLLEY CHAIN:	Check geared trolley hand chain and drive.

When detecting any abnormality during inspection due to erroneous use, instruct the operator and user for correct use of the chain hoist.

LOG BOOK

RED ROOSTER LIFTING

DAILY VISUAL INSPECTION REQUIREMENTS																															
	MONTH:															YEAR:															
DAY	1	2	3	4	5	6	7	8	9	10	11	12	13	14	15	16	17	18	19	20	21	22	23	24	25	26	27	28	29	30	31
AIR HOIST CHECKS																															
HOOK SWIVEL																															
AIR LEAKS																															
AIR SET LUBRICATION																															
SAFETY CATCHES																															
NOISE / OPERATION																															
PENDANT OPERATION / E-STOP																															
CHAIN LUBRICATION																															
CHAIN NUT TWISTED																															
SUPPLY HOSE																															
CHAIN COLLECTOR																															
TROLLEY CHECKS																															
OPERATION / NOISE																															
FESTOON SYSTEMS																															
MOVEMENT (IF FITTED)																															
OPERATOR'S NAME																															
1.																															
2.																															
3.																															
4.																															

COMMENTS	INITIALS	DATE

• Red Rooster Lifting Limited • Nauta House, The Meadows, Oldmeldrum, Aberdeenshire, AB51 0EZ • Tel: +44 (0) 1651 872101 •

LOG BOOK

RED ROOSTER LIFTING

MAINTENANCE CHECKS

TO BE CARRIED OUT MONTHLY IN PRODUCTION OPERATIONS WHERE HEAVILY USED OR IN HARSH WORKING CONDITIONS.
TO BE CARRIED OUT THREE MONTHLY WHEN THE HOIST IS ONLY USED OCCASIONALLY.

PLEASE CONTACT RED ROOSTER TO CONFIRM IF MONTHLY OR THREE MONTHLY MAINTENANCE CHECKS ARE REQUIRED IF YOU ARE NOT SURE.

MONTHLY / 3 MONTHLY CHECKS CARRIED OUT AS PER MANUAL	NAME	DATE

RED ROOSTER
LIFTING

Head Office:
Nauta House
The Meadows
Oldmeldrum
Aberdeenshire, AB51 0EZ

T: +44 (0) 1651 872101
E: sales@redroosterlifting.com
W: **www.redroosterlifting.com**

Depot:
Unit 26
Kelvin Way Trading Estate
Kelvin Way
West Bromwich, B70 7TW

T: +44 (0) 121 525 4162