Dimplex®

Heating Solutions Trade Guide

Product Catalogue 2021

Glen Dimplex
HEATING & VENTILATION

Glen Dimplex Heating & Ventilation

At Glen Dimplex Heating & Ventilation we are committed to supporting the most forward-thinking, efficient and sustainable industry-leading brands. With our combined enthusiasm and dedication to developing the very best heating, hot water and ventilation solutions, you can feel assured that the products, services and systems created by our brands are:

Innovative - in their product design, technology and manufacture

Expert - in their application of technical knowledge and industry experience

Proven - from historically defining markets for more than 760 years collectively

Trusted - worldwide to meet the highest standards of safety, quality and ethics

Ability BURCO CAMPA Creda Dimplex

faber REDRING Valor Xpelair

About Dimplex

For nearly 70 years Dimplex has built a portfolio of over 700 affordable and attractively-designed heating solutions that are efficient, reliable and durable.

This unrivalled experience, combined with our unmatched reputation for quality and innovation is why we remain the market leader in the electric heating world.

We offer products to suit both domestic and commercial applications across a wide range of categories, that are easy to install and readily available from your local wholesaler today.

- ✓ The world's largest electric heating appliance manufacturer
- ✓ Award-winning customer support team
- ✓ Our associations include: ECA, EDA, BEAMA and HEVAC
- ✓ We produce BEAB-approved products—the highest safety standard in the UK
- ✓ Maintenance free products available
- ✓ Easy to install, setup and use
- ✓ We offer a free heating design service

Customer contacts

Online: www.dimplex.co.uk/support

Customer Support Team: 0344 879 3588*

Customer Support Opening Times:

Monday - Thursday: 08:30 - 16:00

Friday: 08:30 - 15:00

Saturday - Sunday: Closed

*Calls to us cost no more than a national rate call to an 01 or 02 number and are included in mobile bundled minutes.

Driven by knowledge and innovation

The Glen Dimplex Heating & Ventilation brands, with their extensive experience and ever-increasing collective product portfolios, assist and excel in new build specification, refurbishing and upgrading of residential, commercial and public-sector buildings.

Our popular brands make us the market leader in electric heating appliances in Europe and a leading player in decorative electric and gas fires and solid fuel stoves. Glen Dimplex Heating & Ventilation's focus is the design, development and manufacture of professionally installed heating and ventilation systems for residential and commercial buildings, ranging from smart electric heating systems using the latest control and communications technologies, through to heating, cooling and ventilation systems, encompassing heat pumps, Mechanical Ventilation and Heat Recovery (MVHR) systems and a range of heat emitters.

In the electric heating industry, our brands' portfolios include the UK's most popular ranges of storage and panel heating, expertise in portable heating solutions and an impressive variety of innovative gas and electric fires. In ventilation they cover domestic and commercial ventilation systems for single rooms or entire buildings as well as portable air treatments. In addition, from their work in hot water solutions, our brands have developed various instantaneous and stored hot water systems, suited to both consumer and professional needs.

Glen Dimplex
HEATING & VENTILATION



A Name You Can Trust

We are proud of our long-standing relationship with the trade and our tradition of developing bespoke heating solutions for your customers, providing great value for money, impressive reliability and outstanding customer service.

Our products, your benefits.

Tried and tested technology

All Dimplex products are designed to meet the latest international performance and safety standards. They are subjected to rigorous testing and evaluation using state-of-the-art facilities that recreate challenging environments to ensure our products perform – every time.

Standard Assessment Procedure (SAP)

Dimplex offers electric heating solutions that can make gaining SAP compliance in multiple dwellings easier than you might think. For example, the Dimplex Quantum could improve a properties SAP rating by as much as ten points.

Customer service

When you choose Dimplex, you have the support of our experienced award winning customer support team, as well as backup provided by our national network of specialist service engineers.

Free design service

Our in-house design team can provide detailed plans for the application of our technologies which are specific to an individual property.

These include full heat loss calculations, energy saving estimates, plus a complete product and accessory specification.

Wide distribution network

Our wide distribution network utilises our national and regional partners to ensure full product availability through national and independent distributors.

Product Guarantee*

All Dimplex products come with at least one-year manufacturer's guarantee, but we are pleased to offer an extended guarantee on some products* if registered within 28 of purchase/installation.

* Terms and conditions apply.

Ecodesign Regulations

Electric heating is changing. Just like light bulbs and gas boilers, new regulations are redefining the technology that can be sold in the UK. Here's what you need to know about the changes:

What is the Ecodesign Directive?

The Ecodesign Directive sets minimum specification requirements for products that consume energy. It aims to deliver more energy-efficient products and reduce their energy consumption.

How does it work?

Ecodesign provides minimum requirements that products must meet if they are to continue to be sold. This meant that manufacturers had to either update their products to comply with the new regulations, or discontinue them and replace them with more efficient technologies.

What is Lot 20?

Lot 20 is the section of Ecodesign that deals specifically with electric space heating.

When did it start?

Since 1st January 2018, electric space heating products manufactured for sale in the UK have had to comply with this new minimum efficiency rating for their category.

Which products are affected?

The legislation affects the following, and there are slightly different requirements for each category:

- Storage heating
- Direct acting heating (panel heaters and electric radiators)
- Portable heating
- Infra-red heating

All Dimplex products comply with these new requirements.

Ecodesign Compliant

How does this affect you?

Lot 20 affects everyone manufacturing and selling electric heating products in the UK. Non-compliant products are no longer manufactured, but are still being sold until they are cleared through the market. This means that you need to change the products that you buy, install and recommend as the new regulations have come into the market.



Contents

About Dimplex 3
Ecodesign (Lot 20) 5
Heating Guides 8

Whole House Heating
Quantum off-peak heater 13
Girona panel heater 14
Monterey panel heater 15
Saletto panel heater 16
PLXE panel heater 17
Q-Rad radiator 18
XLE storage heater 19
LST fan heater 20

Dimplex Control
Dimplex Hub 21
RFM 21

Fires
Club freestanding fire 23
Bach wall mounted fire 24
Chadwick inset fire suite 25
Stamford inset fire 26

Kitchen & Bathroom Heating
BPH bathroom heater 28
TDTR towel rail 29
CPTS towel rail 30
BR towel rail 31
TTR towel rail 32
S towel rail 33
LSTS towel rail 34
Towel rail controllers 35
FX20 downflow heaters 36
BFHE plinth heaters 37
IP rating chart 38

Miscellaneous Heating
ECOT tubular heater 40
MPH frost protector 41
DXLWP portable heater 42
IRX Infra-red heater 43

Portable Heating
RUG3TS workshop heater 45
ECR 46
OCR 47
OFX Oil radiator 48
DXUF / DXFF 49
Contrast convectors 50

Commercial Heating
AC over door heaters 53
CAB and DAB air curtains 56
CFSE fan heater 58
CFH fan heater 59
CFCH controller 59
PFHE fan heater 60
OPH quartz patio heater 61
CXD ceramic heater 62
CXDE ceramic heater 63
QXD quartz heater 64
QXDE quartz heater 65
WFE fan heater 66
HAW air warmer 67

Water Heating
QWCd Quantum cylinder 69
QWCd slimline cylinder 70
ECSd direct cylinder 71
EDL heat pump 72

Design Support
Heater sizing guide 74
Cable entry points 76
Heat design request 78

For a full list of spares, visit **www.dimplex.co.uk/spares**

Residential Heating Guide

Airing Cupboard	
Tubular heaters	?
MPH frost protector	?

Attic Conversion	
Q-Rad radiator	?
Panel heaters	?
Slimline storage heater	?
Portable heaters	?
Convector heaters	?

Bathroom	
Q-Rad radiator	?
Panel heaters	?
Bathroom panel heaters	?
Towel rails	?
IRX	?

Conservatory	
Q-Rad radiator	?
Panel heaters	?
Slimline storage heater	?
Portable heaters	?
Convector heaters	?

Dining Room	
Q-Rad radiator	?
Panel heaters	?
Quantum storage heaters	?
Slimline storage heater	?

Ensuite	
Q-Rad radiator	?
Panel heaters	?
Towel rails	?
Downflow heaters	?

Greenhouse	
Tubular heaters	?
MPH frost protector	?

Hallway / Landing	
Q-Rad radiator	?
Panel heaters	?
Quantum storage heaters	?
Slimline storage heater	?

Kitchen	
Q-Rad radiator	?
Panel heaters	?
Quantum storage heaters	?
Slimline storage heater	?
Towel rails	?
Downflow heaters	?
Base unit heaters	?

Lounge	
Q-Rad radiator	?
Panel heaters	?
Quantum storage heaters	?
Slimline storage heater	?

Main Bedroom	
Q-Rad radiator	?
Panel heaters	?

Patio	
Quartz heaters	?

Spare Bedroom	
Q-Rad radiator	?
Panel heaters	?
Slimline storage heater	?
Portable heaters	?
Convector heaters	?

Study	
Q-Rad radiator	?
Panel heaters	?
Quantum storage heaters	?
Slimline storage heater	?
Portable heaters	?
Convector heaters	?

Utility Room	
Panel heaters	?
Towel rails	?
Base unit heaters	?
Portable fan heaters	?

Workshop	
Portable fan heaters	?
Quartz heaters	?

Content pg numbers need updating
& final sign off

Commercial Heating Guide

Toilet	
Q-Rad radiator	?
Panel heaters	?
Bathroom panel heaters	?
Towel rails	?
Downflow heaters	?
IRX	?

Dining Room	
Q-Rad radiator	?
Panel heaters	?
Quantum storage heaters	?
Slimline storage heater	?

Hospitality (Hotel, Restaurant, Leisure)	
Panel / electric heaters	?
Towel rails	?
Over door heaters	?
Air curtains	?
Quartz radiant / ceramic	?
Patio heaters	?
Wall fan convectors	?

Kitchen	
Q-Rad radiator	?
Panel heaters	?
Quantum storage heaters	?
Downflow heaters	?
Base unit heaters	?

Workshop	
Portable fan heaters	?
Quartz heaters	?

Care Facilities	
LST panel heaters	?
LST towel rails	?

Large Commercial (Airports, Hospitals)	
Air curtains	?
Architectural air curtains	?
Fan heaters	?
Quartz radiant / ceramic	?
Wall fan convectors	?

Industrial	
Air curtains	?
Fan heaters	?
Quartz radiant / ceramic	?
Air warmers	?

Public Buildings (Airports, Hospitals)	
Panel / electric heaters	?
Over door heaters	?
Air curtains	?
CFH fan heater	?
Quartz radiant / ceramic	?
Wall fan convectors	?

Retail / Offices	
Panel / electric heaters	?
Over door heaters	?
Air curtains	?
Architectural air curtains	?
CFH fan heater	?
Patio heaters	?
Wall fan convectors	?

Other	
Portable heating	?
Convector heaters	?

Types of Electric Heater

Many people are still unclear as to the types of electric heating system available, and the meters and tariffs that they use. There are two basic technology types, direct-acting heating and storage heating.

To avoid recommending the wrong type of heater for a property it is important to understand the basic operation of these two technologies. For example, changing an old storage heater to a direct-acting heater could significantly increase the cost of heating that room, and if the meter were also changed from dual to single-rate the cost of the whole properties hot water and night-time appliance use would also go up.

Direct Acting

Direct-acting heaters use peak-rate electricity to heat a space. These are also known as panel heaters, electric radiators, aluminium radiators or oil-filled radiators, depending on the technology used to house the element. These heaters are all 100% efficient at the point of use and will cost the same amount to run, as they convert peak-rate electricity into heat when it is needed, through a single-rate electric meter.

These units are perfect for new-build and well-insulated properties, or rooms that have low or occasional requirements for use such as bedrooms, studies and light commercial spaces. They are also ideal for use within a building that does not have a dual-rate (off-peak) electric meter.

Storage Heating

Storage heaters use off-peak energy (costing around half that of peak rate energy per kW) to heat a space. These heaters take energy in at night and store it ready for use the next day. Storage heaters are cheaper to operate than direct-acting heaters because they use energy taken in during the off-peak (cheaper) periods. They can do this because of a dual-rate electric meter, which provides electricity at two rates/prices (peak and off-peak). This often means that the hot water needs of the property are met using cheaper electricity, as well as any appliances that are used during these off-peak times.

High Heat Retention Storage Heating (HHRSH)

The modern replacement option for traditional storage heaters, high-heat retention storage heaters use the latest technology to store heat for longer and release it only when it's needed.

High Heat Retention Storage Heaters are the cheapest way to heat a room electrically for 24hrs, and replacing traditional storage heaters with HHRSH units in a property will improve the EPC rating, running cost, comfort and control offered by the system.



The Dimplex Control Platform

Dimplex Control App



Dimplex Hub
Page 21



Radio Frequency Module
Page 21



What's it all about?

Control and monitor your heating and hot water with Dimplex Control. Group heaters into zones to easily control and track their energy usage. Any time. Anywhere.

- **Control over comfort and cost**
- **Sustainable use of energy to avoid waste**
- **Convenient, simple heating adjustments**
- **Attractive choice of heaters**

HUB Product requires Dimplex Hub sold seperately

RFM Product requires Radio Frequency Module sold seperately

Quantum HHR
Page 13

HUB





Girona
Page 14

HUB RFM

Monterey
Page 15

HUB RFM





Saletto
Page 16

HUB RFM

PLXE
Page 17

HUB RFM





Q-Rad
Page 18

HUB RFM

BPH
Page 28

HUB RFM





Quantum Water Cylinder
Page 69

HUB

Slimline Quantum Water Cylinder
Page 70

HUB





Edel
Page 72

HUB

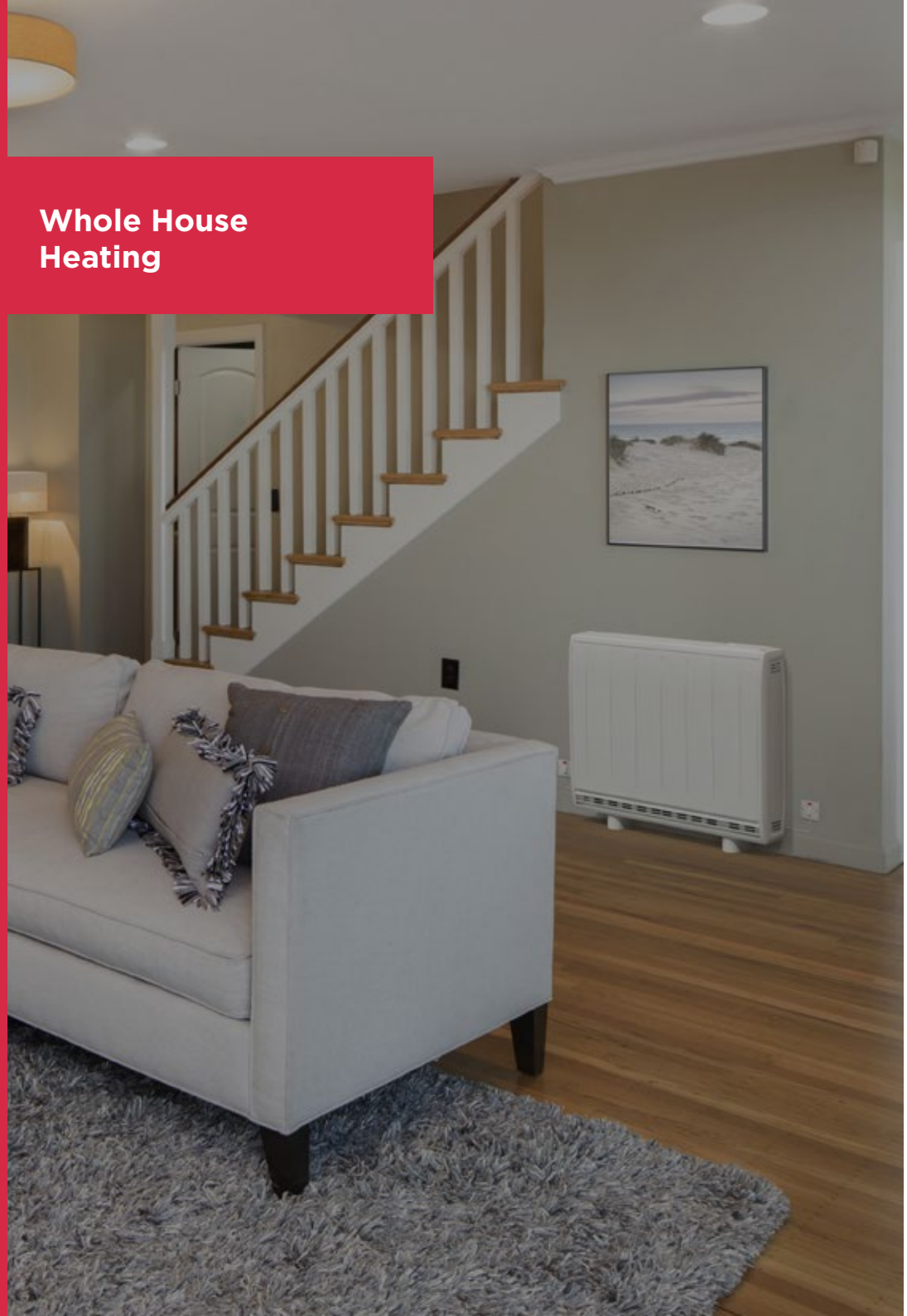

Whole House Heating

Quantum

High heat retention storage heater

Controls

Digitally controlled electronic thermostat accurate to (+/-0.2°C).
Hub RF

Timer Modes: 7 Day Programmable User Timer.

Pre-programmed Timer Modes: Out All Day, Home All Day, Away.

- Graphical display with RGB backlight
- Tactile buttons with audio feedback
- User replaceable battery (coin-type)

Controller Functions

- Open window detection
- Boost mode and settings
- Adjustable max set point range (7-30°C)
- Bluetooth for software updates
- Child lock

Safety Features

Electromechanical overheat protection.

Colour/Finish

Metal Chassis, Air Outlet Grille & Control Moulding – Traffic White (RAL9016).

Storage Core

High-density bonded magnetite energy cells.

Supply

- 1/N/1/N/PE 230-240 (Twin Supply) 230-240V/Hz
- 1/N/PE 230-240 (Single Supply) 230-240V/Hz

Guarantee

2 year UK manufacturer Guarantee with option to extend to 10 years with completed online registration at dimplex.co.uk.

IP Rating

IPX4





Dimplex Control
See page 10 for details

Product Dimensions

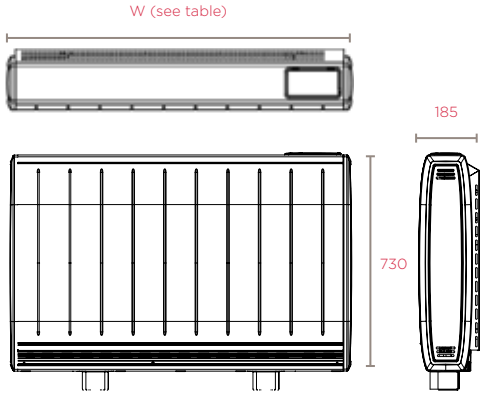

Model	Input rating +5%/ -10%(W)	Output rating (kW)	Boost mode rating (W)	Height (mm)	Width (mm)	Depth (mm)	Weight (kg)	Installed weight(kg)	Energy pack requirement
QM050RF	1020	0.50	400	730	580	185	27.2	66	4
QM070RF	1560	0.70	630	730	703	185	24.8	83	6
QM100RF	2220	1.00	880	730	865	185	29.4	107	8
QM125RF	2760	1.25	1130	730	1069	185	38	135	10
QM150RF	3300	1.50	1300	730	1069	185	38.6	155	12

Girona

Panel heater

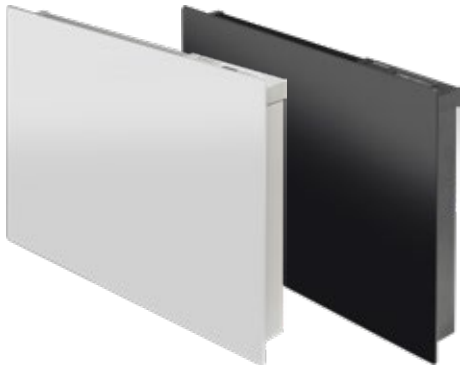

Controls

Digitally controlled electronic thermostat accurate to (+/-0.2°C).

Timer Modes: 7 Day Programmable User Timer.

Pre-programmed Timer Modes: Out All Day, Home All Day, Away.

Continuous Heat Modes: Eco, Manual, Frost Protect, Setback, Runback, Off.

- Graphical display with RGB backlight
- Capacitive buttons with audio feedback
- User replaceable battery (coin-type)

Controller Functions

- Open window detection
- Adaptive start
- Advanced time period for timer operation
- Adjustable max set point range (7-32°C)
- Bluetooth for software updates
- Child lock & Landlord lock (PIN-based)

Safety Features

- Thermal cut-out. Auto reset type
- Overheat detection

Colour/Finish

Metal Chassis, Air Outlet Grille & Control Moulding – Traffic White (RAL9016) on WE models, black on BE models.

Element

Compact, finned, mineral filled sheathed element.

Supply

- 1.3 metres fitted, 3 core for fused spur installation
- 1/N/PE ~230-240V, 50Hz Class I with earth wire

Guarantee

2 year UK manufacturer Guarantee.

IP Rating

IP24



Dimplex Control
See page 10 for details

Product Dimensions

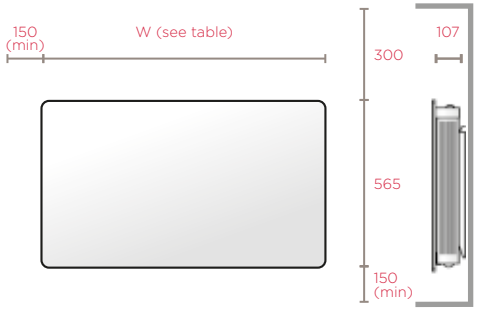

Model	Output (kW)	Height (mm)	Width (mm)	Depth (mm)	Weight (kg)
GFP050WE	0.50	565	530	107	13.4
GFP075WE	0.75	565	530	107	13.4
GFP100WE	1.00	565	700	107	16.9
GFP150WE	1.50	565	770	107	18.6
GFP200WE	2.00	565	940	107	22.1
GFP050BE	0.50	565	530	107	13.4
GFP075BE	0.75	565	530	107	13.4
GFP100BE	1.00	565	700	107	16.9
GFP150BE	1.50	565	770	107	18.6
GFP200BE	2.00	565	940	107	22.1

Monterey

Panel heater



Controls

Digitally controlled electronic thermostat accurate to (+/-0.2°C).

Timer Modes: 7 Day Programmable User Timer.

Pre-programmed Timer Modes: Out All Day, Home All Day, Away.

Continuous Heat Modes: Eco, Manual, Frost Protect, Setback, Runback, Off.

- Graphical display with RGB backlight
- Capacitive buttons with audio feedback
- User replaceable battery (coin-type)

Controller Functions

- Open window detection
- Adaptive start
- Advanced time period for timer operation
- Adjustable max set point range (7-32°C)
- Bluetooth for software updates
- Child lock & Landlord lock (PIN-based)

Safety Features

- Thermal cut-out. Auto reset type
- Overheat detection

Colour/Finish

Metal Chassis, Air Outlet Grille & Control Moulding – Traffic White (RAL9016).

Element

Compact, finned, mineral filled sheathed element.

Supply

- 1.3 metres fitted, 3 core for fused spur installation
- 1/N/PE ~230-240V, 50Hz Class I with earth wire

Guarantee

2 year UK manufacturer Guarantee.

IP Rating

IP24



Dimplex Control
See page 10 for details

Product Dimensions

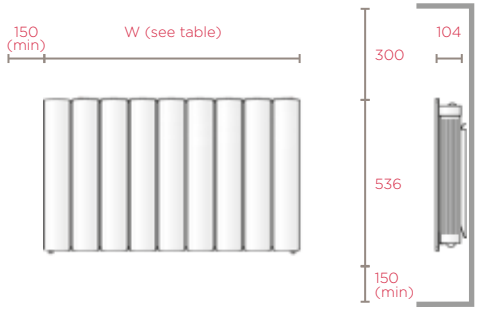

Model	Output (kW)	Height (mm)	Width (mm)	Depth (mm)	Weight (kg)
MFP050E	0.50	536	503	104	11.3
MFP075E	0.75	536	503	104	11.3
MFP100E	1.00	536	671	104	14
MFP150E	1.50	536	741	104	15.4
MFP200E	2.00	536	911	104	18.3

Saletto

Low profile panel heater

Controls

Digitally controlled electronic thermostat accurate to (+/-0.2°C).

Timer Modes: 7 Day Programmable User Timer.

Pre-programmed Timer Modes: Out All Day, Home All Day, Away.

Continuous Heat Modes: Eco, Manual, Frost Protect, Setback, Runback, Off.

- Graphical display with RGB backlight
- Capacitive buttons with audio feedback
- User replaceable battery (coin-type)



Controller Functions

- Open window detection
- Adaptive start
- Advanced time period for timer operation
- Adjustable max set point range (7-32°C)
- Bluetooth for software updates
- Child lock & Landlord lock (PIN-based)



Dimplex Control
See page 10 for details

Safety Features

- Thermal cut-out. Auto reset type
- Overheat detection

Colour/Finish

Metal Chassis, Air Outlet Grille & Control Moulding – Traffic White (RAL9016).

Element

Compact, finned, mineral filled sheathed element.

Supply

- 1.3 metres fitted, 3 core for fused spur installation
- 1/N/PE ~230-240V, 50Hz Class I with earth wire

Guarantee

2 year UK manufacturer Guarantee.

IP Rating

IP24

Product Dimensions

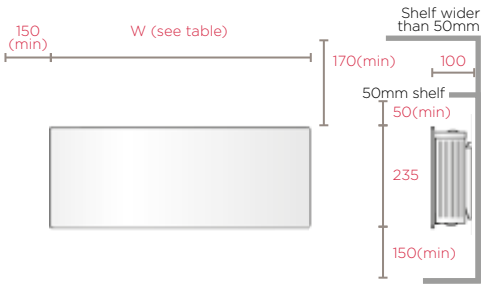

Model	Output (kW)	Height (mm)	Width (mm)	Depth (mm)	Weight (kg)
LPP050E	0.50	235	746	100	6.7
LPP075E	0.75	235	746	100	6.7
LPP100E	1.00	235	877	100	7.6
LPP150E	1.25	235	1142	100	9.9

PLXE

Panel heater

Controls

Digitally controlled electronic thermostat accurate to (+/-0.2°C).

Timer Modes: 7 Day Programmable User Timer.

Pre-programmed Timer Modes: Out All Day, Home All Day, Away.

Continuous Heat Modes: Eco, Manual, Frost Protect, Setback, Runback, Off.

- Graphical display with RGB backlight
- Capacitive buttons with audio feedback
- User replaceable battery (coin-type)



Controller Functions

- Open window detection
- Adaptive start
- Advanced time period for timer operation
- Adjustable max set point range (7-32°C)
- Bluetooth for software updates
- Child lock & Landlord lock (PIN-based)



Dimplex Control
See page 10 for details

Safety Features

- Thermal cut-out. Auto reset type
- Overheat detection

Colour/Finish

Metal Chassis, Air Outlet Grille & Control Moulding – Traffic White (RAL9016).

Element

Compact, finned, mineral filled sheathed element.

Supply

- 1.3 metres fitted, 3 core for fused spur installation
- 1/N/PE ~230-240V, 50Hz Class I with earth wire

Guarantee

2 year UK manufacturer Guarantee.

IP Rating

IP24

Product Dimensions

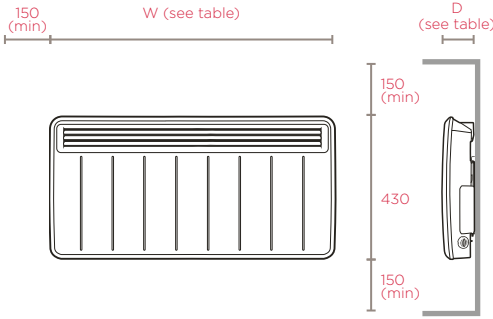

Model	Output (kW)	Height (mm)	Width (mm)	Depth (mm)	Weight (mm)
PLX050E	0.50	430	450	108	4.6
PLX075E	0.75	430	620	108	5.9
PLX100E	1.00	430	620	108	5.9
PLX125E	1.25	430	690	108	6.1
PLX150E	1.50	430	690	108	6.1
PLX200E	2.00	430	860	108	7.8
PLXC300E	3.00	430	860	143	8.7

Q-Rad

Electric radiator



Controls

Digitally controlled electronic thermostat accurate to (+/-0.2°C).

Timer Modes: User Timer.

Pre-programmed Timer Modes: Out All Day, Home All Day, Away.

Continuous: Manual, Eco, Off, Frost Protect.

- Graphical display with RGB backlight
- Capacitive buttons with audio feedback
- User replaceable battery (coin-type)

Controller Functions

- Open window detection
- Adaptive start
- Advanced time period for timer operation
- Adjustable max set point range (7-32°C)
- Bluetooth for software updates
- Child lock and landlord lock (pin based)

Safety Features

- Two auto reset cut-outs, one for each element
- Thermal fuse protection on front element

Colour/Finish

Metal Chassis, Air Outlet Grille & Control Moulding – Traffic White (RAL9016).

Element

Convection – Tubular element with aluminium coated fins for improved convective performance.

Radiant – Cable on foil element. Silicone insulated heating cable on an aluminium sheet.

Supply

- 1.3 metres fitted, 3 core for fused spur installation
- 1/N/PE ~230-240V, 50Hz Class I with earth wire

Guarantee

2 year UK manufacturer Guarantee.

IP Rating

IP24



Dimplex Control

See page 10 for details

Product Dimensions

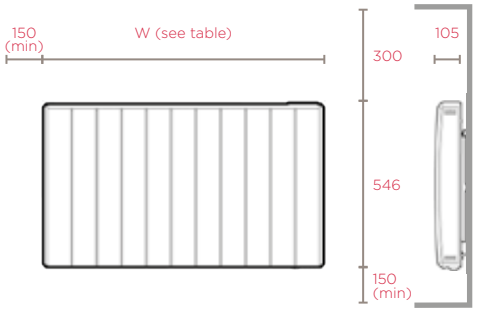

Model	Output (kW)	Convective (W)	Radiant (W)	Height (mm)	Width (mm)	Depth (mm)	Weight (kg)
QRAD050E	0.50	301	199	546	513	105	7.1
QRAD075E	0.75	551	199	546	513	105	7.1
QRAD100E	1.00	714	286	546	675	105	8.7
QRAD150E	1.50	1213	287	546	756	105	9.4
QRAD200E	2.00	1660	340	546	918	105	11.0

These products are compatible with Dimplex Control. See page 79 for more details.

XLE

Slimline storage heater



Controls

Digitally controlled electronic thermostat accurate to (+/-0.2°C).

Timer Modes: 7 Day Programmable User Timer.

Pre-programmed Timer Modes: Out All Day, Home All Day, Away.

Continuous Heat Modes: Setback.

- Graphical display with RGB backlight
- Capacitive buttons with audio feedback
- User replaceable battery (coin-type)

Controller Functions

- Open window detection
- Automatic Charge Control
- History/Reporting Screens
- Boost Mode, User Adjustable
- Heat Demand % Adjustment
- Bluetooth for software updates
- Child lock & Landlord lock (PIN Based)

Safety Features

Electronic overheat protection. Additional electromechanical overheat protection. LVD and EMC compliance.

Colour/Finish

Metal Chassis & Control Moulding – Traffic White (RAL9016) Grille – RAL703 anodised.

Storage Core

High-density bonded magnetite energy cells.

Supply

1/N/PE 230-240V/50Hz (Peak/Off-Peak) Class II.

Guarantee

2 year UK manufacturer Guarantee.

IP Rating

IPX4



Product Dimensions

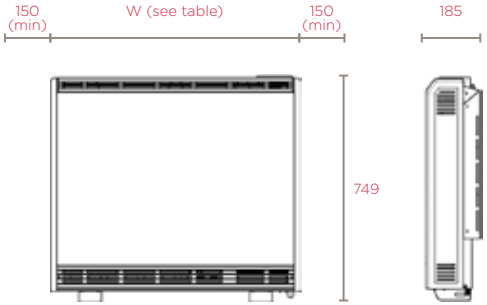

Model	Input rating +5%/ -10%(W)	Output rating (kW)	Boost mode rating (W)	Height (mm)	Width (mm)	Depth (mm)	Installed weight (kg)	Energy pack requirement
XLE050	1020	0.50	340	749	580	185	65	4
XLE070	1560	0.70	520	749	700	185	87	6
XLE100	2220	1.00	740	749	825	185	109	8
XLE125	2760	1.25	920	749	945	185	135	10
XLE150	3300	1.50	1100	749	1067	185	157	12

LST

Low surface temperature panel heater

Controls

Digitally controlled electronic thermostat accurate to (+/-0.2°C).

Timer Modes: 7 Day Programmable User Timer.

Pre-programmed Timer Modes: Out All Day, Home All Day, Away.

Continuous Heat Modes: Eco, Manual, Frost Protect, Off.

- Graphical display with RGB backlight
- Capacitive buttons with audio feedback
- User replaceable battery (coin-type)



Controller Functions

- Open window detection
- Adaptive start
- Advanced time period for timer operation
- Adjustable max set point range (7-32°C)
- Bluetooth for software updates
- Child lock

Ecodesign Compliant

BEAB Approved

Intertek



Safety Features

- Thermal cut-out. Auto reset type
- Overheat detection
- NHS LST Directive compliance

Colour/Finish

Metal Chassis, Air Outlet Grille & Control Moulding – Traffic White (RAL9016).

Element

Compact, finned, mineral filled sheathed element.

Supply

- 1.3 metres fitted, 3 core for fused spur installation
- 1/N/PE ~230-240V, 50Hz Class I with earth wire

Guarantee

2 year UK manufacturer Guarantee.

IP Rating

IP24

This product has been designed to comply with the maximum surface temperature requirements of 43°C as recommended by NHS estates health guidance notes.

Product Dimensions

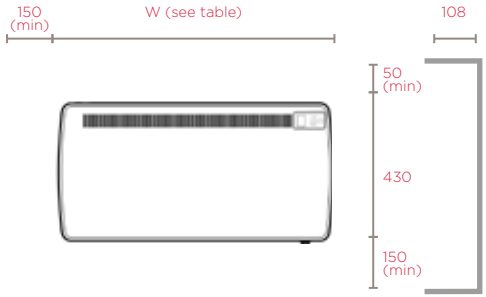

Model	Output (kW)	Height (mm)	Width (mm)	Depth (mm)	Weight (kg)
LST050	0.50	430	688	108	7.1
LST075	0.75	430	688	108	7.1
LST100	1.00	430	688	108	8.7
LST150	1.50	430	860	108	9.4

Dimplex Hub

Only supported products are compatible. Check dimplex.co.uk/control/compatibility

I/O

Connection to devices

- 868MHz low band RF, AES-128 encrypted
- 1x RS485 port

Internet connection

- 2.4Ghz Wi-Fi b/g/n, WEP, WPA, WPA2 support
- 1x RJ45 Ethernet port 10/100Mbps

Range

- 20m depending on environment*

*No. of walls, wall construction, noise on operating frequency, etc., will effect range.

Max. connections per Hub

20 devices per Hub.

Colour/Finish

Moulding – Traffic White (RAL 9016).

IP Rating

IP20



Product Dimensions



Model	Height 'H' (mm)	Width 'W' (mm)	Depth 'D' (mm)	Unpacked Weight without cables (Kg)	Unpacked Weight with cables (Kg)
DimplexHub	154	154	41	0.36	0.54

RFM Radio Frequency Module

Only supported products are compatible. Check dimplex.co.uk/control/compatibility

I/O

Connection to devices

- 868MHz low brand RF, Mesh (6LoWPAN), A ES-128 ecrypted

Encryption

- HTTPS
- X.509 certificates

Colour/Finish

Moulding – Traffic White (RAL 9016).

IP Rating

IP20

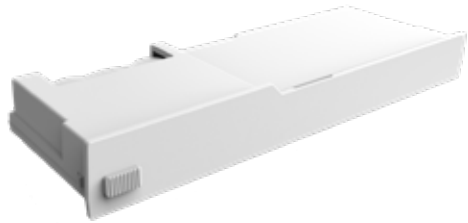



Fires

To see our full range of fires, please visit: dimplex.co.uk/fires

Club

Traditional freestanding electric stove



Controls
- Switch On/Off
- Heat – Off/Low/High
- Thermostatic control

Controller Functions
- Two heat settings
- Adjustable thermostat

Safety Features
Thermal safety cut-out.

Colour/Finish
Black.

Supply
1.5m cable fitted with plug ~230-240V.

Guarantee
1 year.

IP Rating
No rating.

Product Dimensions



Model	Output (kW)	Height (mm)	Width (mm)	Depth (mm)	Weight (kg)
CLB20E	2	597	510	340	17.96

Bach

Wall-mounted electric fire



Controls
- Switch On/Off
- Heat – Off/Low/High
- Thermostatic control

Controller Functions
- Two heat settings
- Adjustable thermostat

Safety Features
Thermal safety cut-out.

Colour/Finish
Black/Dark grey.

Supply
1.5m cable fitted with plug ~230-240V.

Guarantee
1 year.

IP Rating
No rating.

Product Dimensions

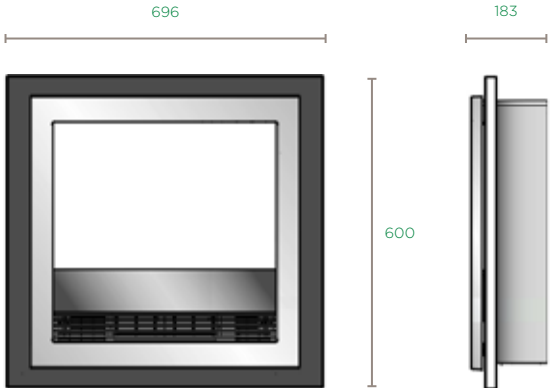

Model	Output (kW)	Height (mm)	Width (mm)	Depth (mm)	Weight (kg)
BCH20E	2	600	696	183	28

Chadwick

Freestanding suite incorporating an electric fire



Controls
- Switch On/Off
- Heat – On/Off
- Thermostatic control

Controller Functions
- One heat setting
- Adjustable thermostat

Safety Features
Thermal safety cut-out.

Colour/Finish
Stone effect surround.

Supply
1.5m cable fitted with plug ~230-240V.

Guarantee
1 year.

IP Rating
No rating.

Product Dimensions



Model	Output (kW)	Height (mm)	Width (mm)	Depth (mm)	Weight (kg)
CDW16E	1.6	915	934	297	39

Stamford

Traditional design inset electric fire

Controls

- Switch On/Off
- Heat – Off/Low/High
- Thermostatic control

Controller Functions

- Two heat settings
- Adjustable thermostat

Safety Features

Thermal safety cut-out.

Colour/Finish

Brass or Chrome effect.

Supply

1.5m cable fitted with plug ~230-240V.

Guarantee

1 year.

IP Rating

No rating.



Product Dimensions

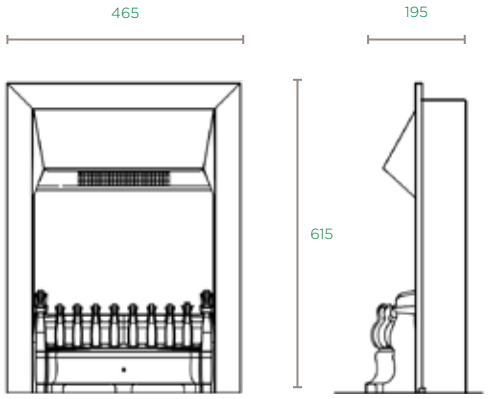

Model	Output (kW)	Height (mm)	Width (mm)	Depth (mm)	Weight (kg)
STM20	2	615	465	195	9



Kitchen & Bathroom Heating

BPH

Bathroom panel heater

Controls

Digitally controlled electronic thermostat accurate to (+/-0.2°C).

Timer Modes: 7 Day Programmable User Timer.

Pre-programmed Timer Modes: Out All Day, Home All Day, Away.

Continuous Heat Modes: Eco, Manual, Frost Protect, Setback, Runback, Off.

- Graphical display with RGB backlight
- Capacitive buttons with audio feedback
- User replaceable battery (coin-type)

Controller Functions

- Open window detection
- Adaptive start
- Advanced time period for timer operation
- Adjustable max set point range (7-32°C)
- Bluetooth for software updates
- Child lock

Safety Features

- Overheat detection
- Thermal cut-outs

Colour/Finish

Metal or Tinted Mirror.

Supply

- 1.3 metres fitted, 3 core for fused spur installation
- 1/N/PE ~230-240V, 50Hz Class I with earth wire

Guarantee

2 year UK manufacturer Guarantee.

IP Rating

IP25





Dimplex Control

See page 10 for details

Eco design Compliant

BEAB Approved

Intertek

Model	Finish	Output (kW)	Height (mm)	Width (mm)	Depth (mm)	Weight (kg)
BPH100G	Mirrored glass	1.00	1073	418	271	16.2
BPH100M	White metal	1.00	1100	430	265	9.7

TDTR

Towel rail

Element

Submersion element with temperature limiter and fuse link.

Thermal Cut-Out

Built-in temperature limiter and overheat protection.

Colour/Finish

White powder coated or Chrome plated.

Construction

Sealed steel shell. D-shaped upright bars. Vertical mounted element.

Supply

- 1.0 metres fitted, 3 core for fused spur installation
- 1/N/PE ~230-240V, 50Hz Class I with earth wire

Guarantee

2 year UK manufacturer Guarantee.

IP Rating

IPX5



Product Dimensions

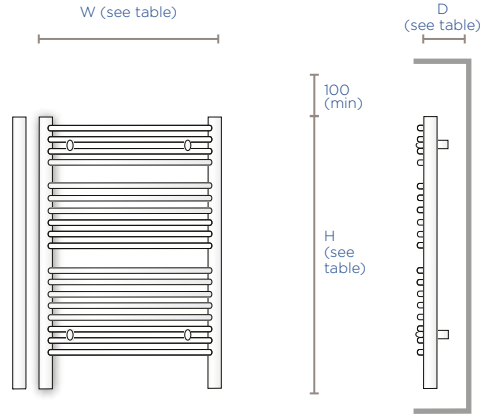

Model	Colour	Output (W)	Height (mm)	Width (mm)	Depth (mm)	Weight (kg)	No. of rails
TDTR175W	White	175	610	453	80-100	4.4	12
TDTR350W	White	350	843	602	95-115	7.9	18
TDTR175C	Chrome	120	610	453	80-100	4.4	12
TDTR350C	Chrome	250	843	602	95-115	7.9	18

CPTS

Towel rail

Element
Submersion element with temperature limiter and fuse link.

Thermal Cut-Out
Built-in temperature limiter and overheat protection.

Colour/Finish
White powder coated or Chrome plated.

Construction
Sealed steel shell. D-shaped upright bars. Vertical mounted element.

Supply
- 1.0 metres fitted, 3 core for fused spur installation
- 1/N/PE ~230-240V, 50Hz Class I with earth wire

Guarantee
2 year UK manufacturer Guarantee.

IP Rating
IPX5



Product Dimensions

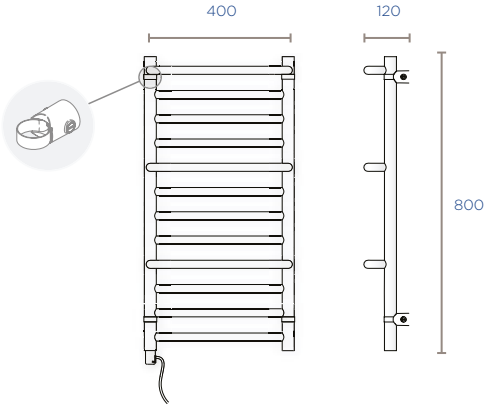

Model	Colour	Output (W)	Height (mm)	Width (mm)	Depth (mm)	Weight (kg)	No. of rails
CPTS	Chrome	120	800	400	120	7.4	12
CPTSW	White	150	800	400	120	7.4	12

BR

Towel rail

Element
Submersion element with temperature limiter and fuse link.

Thermal Cut-Out
Built-in over temperature cut-out.

Construction
Sealed, liquid filled steel shell. Water based fluid with glycol frost/corrosion inhibitor. Vertical mounted immersion element.

Accessories
Energy Regulator:
- FSCC – Chrome regulator with runback timer
- FSCW – White regulator with runback timer

Supply
- 1.0 metres fitted, 3 core for fused spur installation
- 1/N/PE ~230-240V, 50Hz Class I with earth wire

Guarantee
2 year UK manufacturer Guarantee.

IP Rating
IPX5



Product Dimensions (see table)

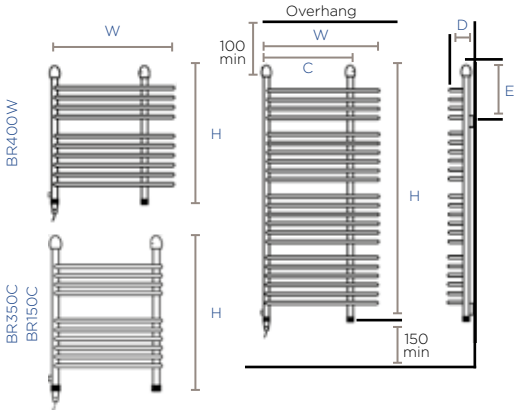

Model	Colour	Output electric (W)	Output water (W)	Height (mm)	Width (mm)	C (mm)	Depth (mm)	E (mm)	Weight (kg)	No. of rails
BR150C	Chrome	150	320	665	430	385	155	268	6.5	10
BR350C	Chrome	350	750	1003	630	603	155	268	13	16
BR400W	White	400	840	1003	630	447	155	268	15	16

TTR

Towel rail

Element
Submersion element with temperature limiter and fuse link.

Thermal Cut-Out
Built in temperature limiter and overheat protection.

Construction
Sealed, liquid filled steel shell. Water based fluid with glycol frost/corrosion inhibitor. Horizontally mounted immersion element.

Accessories
Energy Regulator:
- FSCC – Chrome regulator with runback timer
- FSCW – White regulator with runback timer

Supply
- 1.0 metres fitted, 3 core for fused spur installation
- 1/N/PE ~230-240V, 50Hz Class I with earth wire

Guarantee
2 year UK manufacturer Guarantee.

IP Rating
IPX5



Product Dimensions

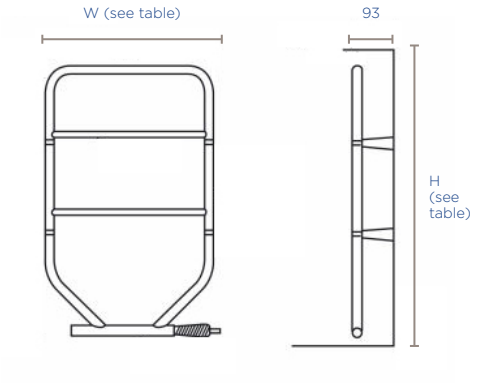

Model	Colour	Output (W)	Height (mm)	Width (mm)	Depth (mm)
TTRC90	Chrome	60	616	533	93
TTRS120	White	120	616	533	93
TTRC130	Chrome	90	851	533	93
TTRC150	Chrome	120	851	787	93
TTRS175	White	175	851	533	93

S

Towel rail

Element
Submersion element with temperature limiter and fuse link.

Thermal Cut-Out
Built in temperature limiter and overheat protection.

Colour/Finish
White stove enamel or Chrome plated.

Construction
Tubular steel. Dry element.

Accessories
Energy Regulator:
- FSCC – Chrome regulator with runback timer
- FSCW – White regulator with runback timer

Supply
- 1.0 metres fitted, 3 core for fused spur installation
- 1/N/PE ~230-240V, 50Hz Class I with earth wire

Guarantee
2 year UK manufacturer Guarantee.

IP Rating
IPX5



Product Dimensions

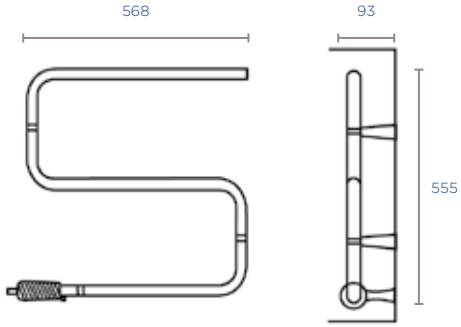

Model	Colour	Output (W)	Height (mm)	Width (mm)	Depth (mm)
S50C	Chrome	45	555	568	93
S50W	White	45	555	568	93

LSTS

Low surface temperature towel rail

Element
Submersion element with temperature limiter and fuse link.

Thermal Cut-Out
Surface temperature regulated to a maximum of 43 °C by automatic resetting thermal cut-out.

Colour/Finish
White stove enamel or Chrome plated.

Construction
Tubular steel. Dry element.

Accessories
Energy Regulator:
- FSCC – Chrome regulator with runback timer
- FSCW – White regulator with runback timer

Supply
- 1.0 metres fitted, 3 core for fused spur installation
- 1/N/PE ~230-240V, 50Hz Class I with earth wire

Guarantee
2 year UK manufacturer Guarantee.

IP Rating
IPX5



Product Dimensions

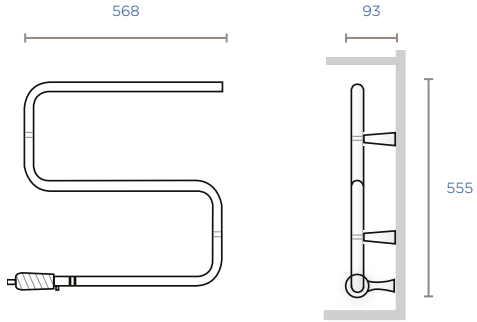

This product has been designed to comply with the maximum surface temperature requirements of 43°C as recommended by NHS estates health guidance notes.

Model	Output (W)	Height (mm)	Width (mm)	Depth (mm)	Weight (kg)
LSTS	15	555	568	93	1.7

FSC

Towel rail control

Controls
- Allows the towel rail to be switched on or off, and for the surface temperature to be adjusted
- Five settings that progressively reduce the temperature of the towel rail and also the energy that it uses
- 'Eco' mode, which allows you to dry a towel without having to leave the towel rail on indefinitely
- Compatible with all Dimplex towel rails

Colour
White or Chrome.

IP Rating
IPX4

Cable Entry Point
Bottom left. No cable supplied.



Product Dimensions

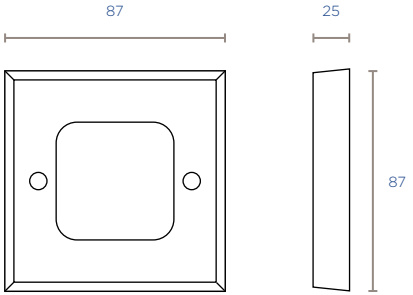

Model	Colour	Height (mm)	Width (mm)	Depth (mm)	Weight (kg)
FSCC	Chrome	87mm	87mm	25mm*	0.1
FSCW	White	87mm	87mm	25mm*	0.1

*Total product depth is 25mm, 5mm of which will be recessed into the backbox.

FX20VE / FX20EIPX4

Downflow heater

Controls
Factory-set 30 minute activation, activated and deactivated by pull cord.

Safety Features
- Electrical reset cut-out
- Non-resettable thermal fuse
- Resettable over heat detection electronic temperature limiter

Colour/Finish
White plastic case.

Construction
Double insulated plastic case. Moulded in flame retardant self-extinguishing grade nylon.

Supply
- 3 core for fused spur installation
- 1/N/PE ~230-240V, 50Hz Class I with earth wire

Guarantee
2 year UK manufacturer Guarantee.

IP Rating
FX20VE - IP22
FX20EIPX4 - IP24

Cable Entry Point
Middle, top. No cable supplied.



FX20VE FX20EIPX4

Product Dimensions

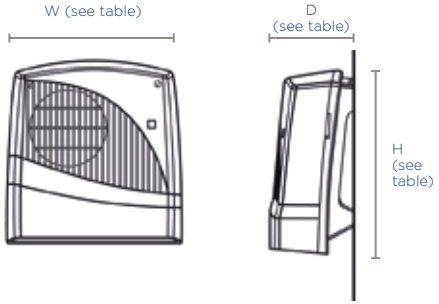

Model	Output (kW)	Height (mm)	Width (mm)	Depth (mm)	Weight (kg)
FX20VE	1/2	242	229	109	1.1
FX20EIPX4	1/2	267	250	131	1.4

BFHE

Base unit heater with remote

Controls
Digitally controlled, accurate electronic thermostat.
Timer Modes: 7 Day Programmable User Timer.
Pre-programmed Timer Modes: Manual, Frost Protect, Runback, Off.
Bluetooth remote supplied with product as standard.

Controller Functions
- Adaptive start
- Advanced time period for timer operation
- Adjustable max set point range (7-32ºC)
- Bluetooth for control

Safety Features
Electrical reset, self-hold cut-out.

Colour/Finish
Air Outlet Grille options supplied with all:
- Traffic White (RAL 9016)
- Brown
- Brushed Stainless Steel

Supply
- 3 core for fused spur installation
- 1/N/PE ~230-240V, 50Hz Class I with earth wire

Guarantee
2 year UK manufacturer Guarantee.

IP Rating
No Rating.



Product Dimensions

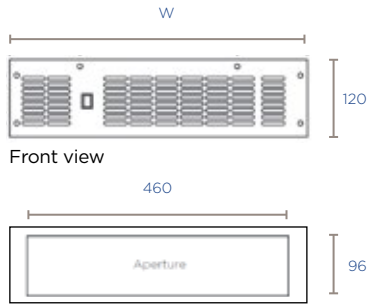

Front view

Aperture Dimensions

Model	Max. output (kW)	Optional output (W)	Height Front Cover (mm)	Height Chassis (mm)	Depth Front Cover (mm)	Depth Chassis (mm)	Weight (kg)
BFH24E	2.4	800, 1600	120	90	490	360	3.5

IP Rating Chart

Zones:

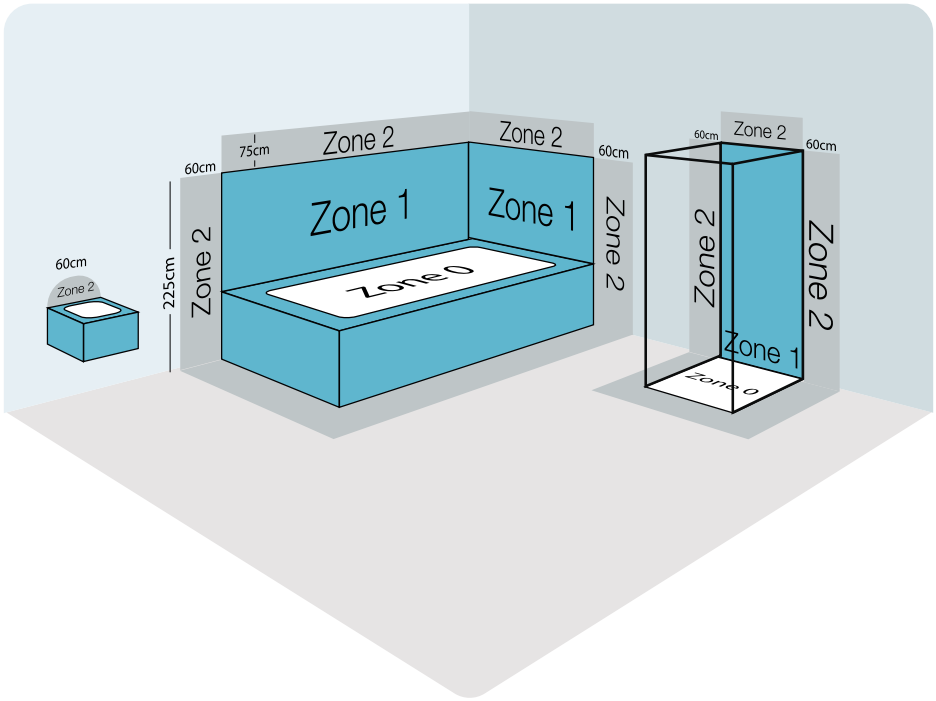

Installation

Zone 0 - IPX7

Inside the bath or shower tray itself. Any appliance installed in this zone must have a minimum rating of IPX7, which is totally immersion proof. It is not recommended to install any ventilation equipment into this zone.

Zone 1 - IPX4

The area above the bath or shower tray area to a height of 2.25m from the floor. In this zone a minimum rating requirement is IPX4 or best practice is to use SELV rated fans.

SELV= Safety Extra Low Voltage, not exceeding 25v Ac.

Zone 2 - IPX4

The area stretching 0.6m outside the perimeter of the bath to a height of 2.25m. As with Zone 1, the minimum rating for this zone is IPX4

Product	IP	Page
BPH Bathroom Panel Heater	IP25	28
TDTR Towel Rail	IPX4	29
CPTS Towel Rail	IPX5	30
BR Towel Rail	IPX5	31
TTR Towel Rail	IPX5	32
S Towel Rail	IPX4	33
LSTS Towel Rail	IPX5	34
FX20IPX4	IPX4	36
FX20VE	IP22	36

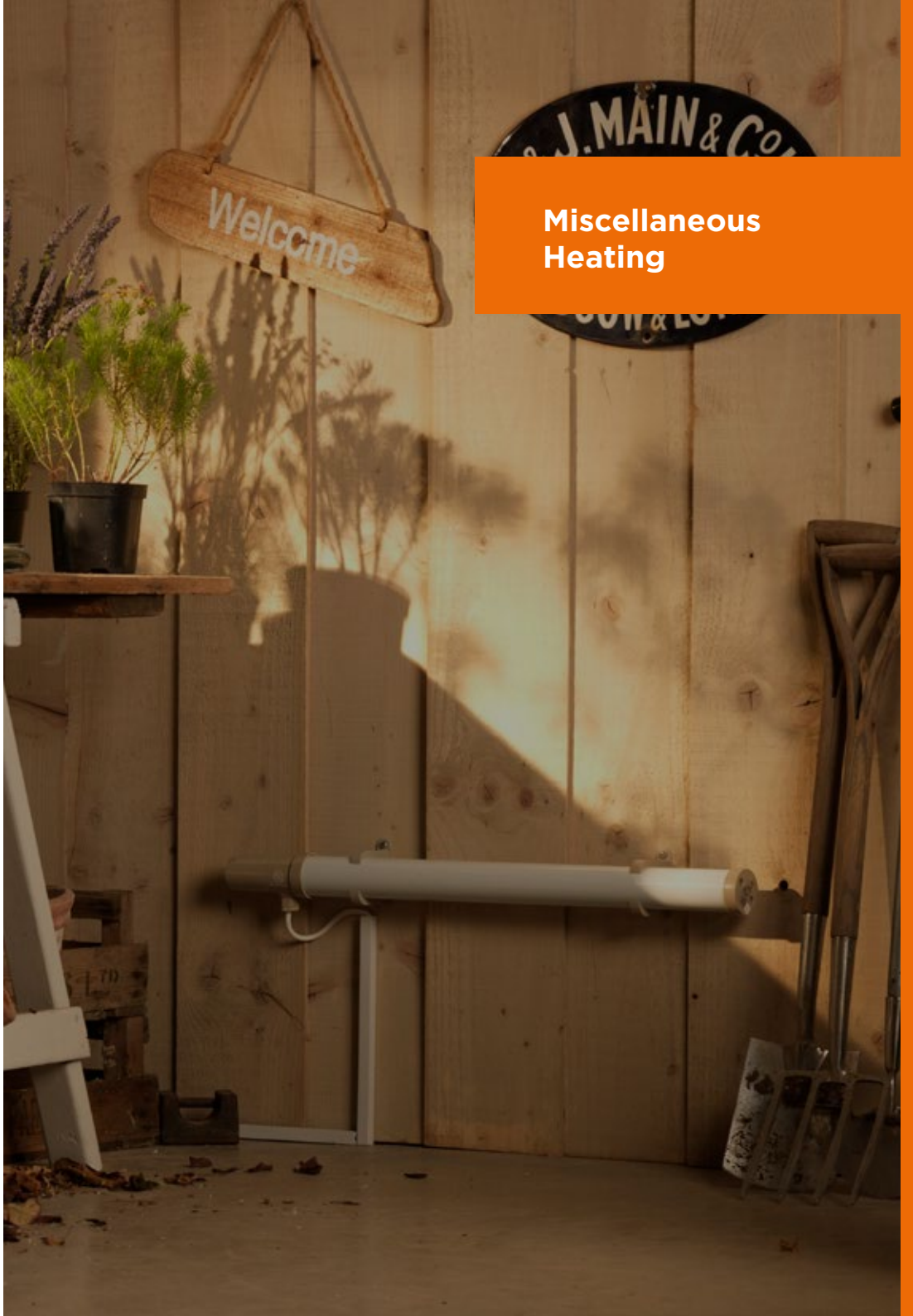

Miscellaneous Heating

ECOT

Tubular heater



Controls
Rotary control.

Controller Functions
Adjustable thermostat allowing frost protection and output selection.

Safety Features
Automatic reset thermal cut-out.

Colour/Finish
White/Grey.

Supply
1.5m cable fitted with plug.

Guarantee
1 year UK manufacturer Guarantee.

IP Rating
IPX4

Accessories
TTHLK (linking kit)



Product Dimensions

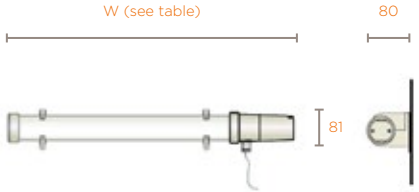

Model	Output (W)	Height (mm)	Width (mm)	Depth (mm)	Weight (kg)
ECOT1FT	40	81	408	80	0.5
ECOT2FT	80	81	713	80	0.6
ECOT3FT	120	81	1018	80	0.8
ECOT4FT	160	81	1323	80	1.0
ECOT5FT	200	81	1630	80	1.1
ECOT6FT	240	81	1933	80	1.3

MPH

Frost protector

Controls
Thermostatic knob with neon indicator.

Controller Functions
Variable thermostat with frost protection setting.

Safety Features
Automatic reset thermal cut-out.

Colour/Finish
White/Grey.

Supply
- 1.5m cable fitted with plug.
- ~230-240V.

Guarantee
1 year UK manufacturer Guarantee.

IP Rating
IPX4



Ecodesign Compliant

BEAB Approved

Intertek

Product Dimensions

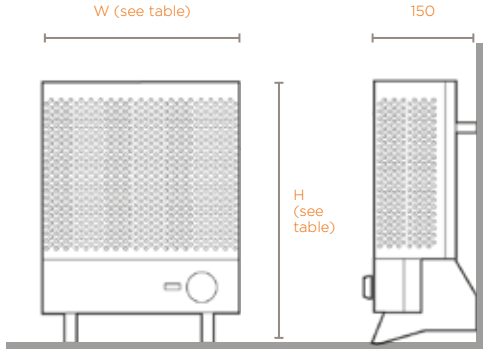

Model	Output (W)	Height (mm)	Width (mm)	Depth (mm)	Weight (kg)
MPH500	500	330	255	150	2.56
MPH1000	1000	435	380	150	3.88

DXLWP

Low wattage portable panel heater

Controls

Electronic seven-day timer and rocker switch (3 on DXLWP800Tie7).

Controller Functions

- On/ off switch, single heat setting on (400Tie7), 3 heat settings (800Tie7)
- 7 day programmable timer
- Adaptive start
- Electronic thermostat

Safety Features

Safety cut-out.

Element

Foil.

Colour/Finish

White.

Supply

~230-240V.

Guarantee

3 year UK manufacturer Guarantee (1+2 years with online registration at dimplex.co.uk).

IP Rating

IPX24



Product Dimensions

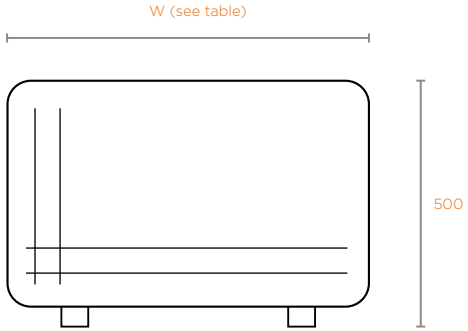

Model	Colour	Output (W)	Height (mm)	Width (mm)	Depth (mm)	Depth (wall mounted) (mm)	Weight (kg)
DXLWP400Tie7	White	400	500	600	20	30	4.56
DXLWP800Tie7	White	800	500	800	20	30	5.97

*Dimensions shown with feet

IRX

Infared heater

Controls

Built in double-pole-pull-cord switch.

Controller Functions

Half Heat/Full Heat/Off.

Element

Quartz element.

Safety Features

No cut-out on-board. Protection via RCD.

Colour/Finish

Silver Grey.

Supply

- 1/N/PE ~230-240V, 50Hz Class I with earth wire

Guarantee

2 year UK manufacturer Guarantee.

IP Rating

IP24



Product Dimensions

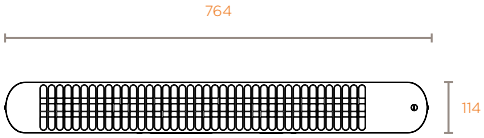

Model	Output (W)	Height (mm)	Width (mm)	Depth (mm)	Weight (kg)
IRX60/120E	600/1200	114	764	93	2



Portable Heating

RUG3TS

Workshop heater

Controls
Rotary controls.

Controller Functions
- Two heat settings (1.5kW/3.0kW)
- Cool blow
- Variable thermostat with frost setting

Safety Features
- Built-in tilt switch.
- Over heat protection

Element
Axial wire element.

Colour/Finish
Black and yellow.

Supply
230-240V~.

Guarantee
3 year UK manufacturer Guarantee (1 and 2 years with online registration at dimplex.co.uk).

IP Rating
IP21



Product Dimensions

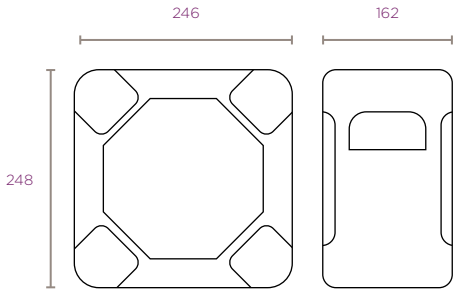

Model	Output (kW)	Height (mm)	Width (mm)	Depth (mm)	Weight (kg)
RUG3TS	1.50/3.00	248	246	162	2.2

ECR

Oil-free freestanding portable radiator

Controls
Rotary thermostatic and heat selection controls.

Controller Functions
- Frost setting
- Three heat settings
- Electronic timer on Tie model

Safety Features
- Safety tilt switch
- Over heat protection

Element
Sheathed.

Colour/Finish
White and dark grey.

Supply
220-240V~.

Guarantee
3 year UK manufacturer Guarantee
(1 and 2 years with online registration
at dimplex.co.uk).

IP Rating
No rating.



BEAB Approved
Intertek

Product Dimensions

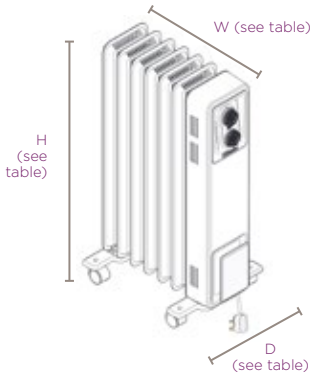

Model	Output (kW)	Height (mm)	Width (mm)	Depth (mm)	Weight (kg)	No. of fins
ECR15	1.50	630	389	281	8.4	7
ECR20	2.0	630	479	281	10.2	9
ECR20Tie	2.0	630	479	281	10.2	9

OCR

Oil-filled freestanding portable radiator

Controls
Rotary thermostatic and heat selection controls.

Controller Functions
- Frost setting
- Three heat settings
- Electronic timer on Tie model

Safety Features
- Safety tilt switch
- Over heat protection

Element
Sheathed.

Colour/Finish
White/dark grey.

Supply
220-240V~.

Guarantee
3 year UK manufacturer Guarantee
(1 and 2 years with online registration
at dimplex.co.uk).

IP Rating
No rating.



BEAB Approved
Intertek

Product Dimensions

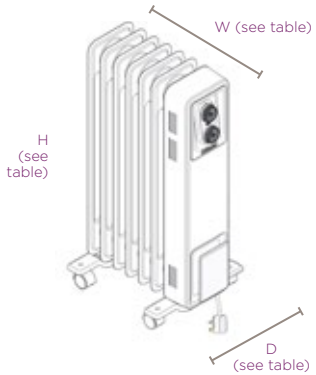

Model	Output (kW)	Heat Settings	Timer	Height (mm)	Width (mm)	Depth (mm)	Weight (kg)
OCR15	1.50	2	x	630	354	281	10
OCR20	2.00	2	✓	630	435	281	11
OCR20Tie	2.00	2	✓	630	435	281	11

OFX

Freestanding oil-filled panel radiators

Controls

- Manually adjustable thermostatic knob
- OFXTI models – 24-hour timer

Safety Features

Thermal safety cut-out.

Colour/Finish

White stove enamel.

Oil

Permanently sealed. Under normal operating conditions will never need changing or re-filling.

Guarantee

3 year UK manufacturer Guarantee.

IP Rating

IPX0



Product Dimensions



Model	Output (kW)	Height (mm)	Width (mm)	Depth (mm)	Weight (kg)
OFX750/OFX750TI	0.75	500	741	230	9.5
OFX1000/OFX1000TI	1.00	586	854	230	12.9
OFX1500/OFX1500TI	1.50	670	1084	230	17.8

DX Portable Fan Heaters

Freestanding portable fan heaters

Controls

- Rotary on DXUF/DXFF

Controller Functions

- On/Off
- Thermostat
- Two heat settings
- Fan only

Safety Features

Manual reset cut-out.

Element

Nichrome wire element.

Colour/Finish

- DXUF – grey and white
- DXFF - white

Supply

220-240V~.

Guarantee

3 year UK manufacturer Guarantee.

IP Rating

No rating.



DXUF



DXFF

BEAB Approved
Intertek

Product Dimensions

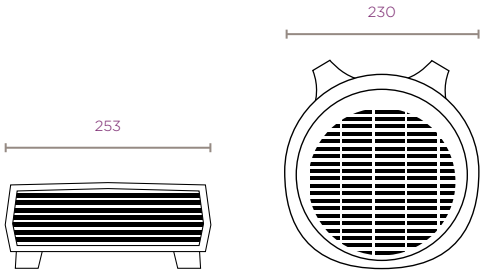

DO NOT use the heaters on deep pile carpets or the long hair type of rugs, or less than 750mm (30”) away from any overhanging surface. Keep combustible materials such as drapes and other furnishings clear from the front, sides and rear of the heater.

Model	Output (kW)	Thermostat	Mains neon	Cool Blow	Height (mm)	Width (mm)	Depth (mm)	Weight (kg)	Colour
DXUF20TN	2.00	✓	✓	✓	243	230	163	1.2	Grey
DXUF30TN	3.00	✓	✓	✓	243	230	163	1.2	Grey
DXFF20TSN	2.00	✓	✓	✓	114	253	245	1.2	White
DXFF30TSN	3.00	✓	✓	✓	114	253	245	1.2	White

DXC Contrast Convector

Portable convector heater



Controls

- Switch On/Off
- Thermostatic control with frost protection
- Twin heat settings

Safety Features

Electrical reset type.

Colour/Finish

White body/Grey trim (RAL 7024).

Supply

1.5m cable with plug.

Guarantee

3 year UK manufacturer Guarantee.

IP Rating

IP20

Product Dimensions

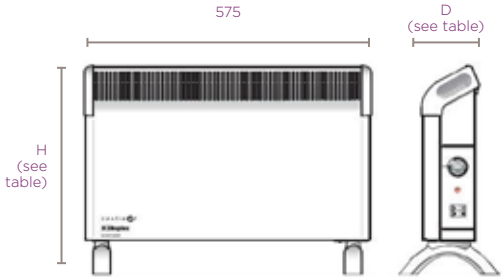

Model	Output (kW)	Height (mm)	Width (mm)	Depth (mm)	Weight (kg)
DXC20	2.00	350 + 68 (feet)	575	104 + 92 (feet)	358
DXC30	3.00	352 + 68 (feet)	575	106 + 92 (feet)	478

DXCTiE Contrast Convector

Wall mounted/portable convector heater



Controls

Digitally controlled, accurate electronic thermostat.

Timer Modes: 7 Day Programmable User Timer.

Continuous Heat Modes: Manual, Frost Protect, Off.

- Segmented display
- Membrane buttons

Controller Functions

- Adaptive start
- Adjustable max set point range (7-32°C)
- Child lock
- DXC30FTIE7 – Turbo Fan for rapid heat distribution

Safety Features

Thermal cut-out, manual reset type.

Colour/Finish

- Front housing – Traffic White (RAL 9016)
- Feet – Graphite Grey (RAL 7024)
- Handles – Traffic White (RAL 9016)

Supply

- 1.3 metres fitted, 3 core for fused spur installation
- 1/N/PE ~230-240 V 50Hz – UK plug
- Class I, with earth wire

Guarantee

2 year UK manufacturer Guarantee.

IP Rating

IP20

Product Dimensions



Model	Output (kW)	Height (mm)	Width (mm)	Depth (mm)	Weight (kg)
DXC20TIE7	2.00	350	575	124	4.1
DXC30TIE7	3.00	350	695	124	4.8
DXC30FTIE7	3.00	350	695	124	4.8



Commercial Heating

AC

Over door heater

Controls

- On-board controls

Controller Functions

- On/Off
- Two heat settings (Half Heat & Full Heat)

Safety Features

2 x manual reset cut-outs (supply interrupt type on AC6N).

Colour/Finish

Pressed steel case with powder coat finish. Traffic White (RAL 9016).

Supply

None supplied.

Guarantee

1 year UK manufacturer Guarantee.

IP Rating

IP21



AC3N

Product Dimensions

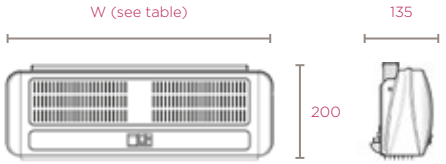

Model	Output (kW)	Air Flow (m^3/h)	Max air speed	Length (mm)	Height (mm)*	Depth (mm)	Weight (kg)
AC3N	1.5/3.0	212	5.0	605	200	135	5.1
AC45N	2.25/4.5	248	5.0	605	200	135	5.2
AC6N	3.0/6.0	446	5.5	905	200	135	7.2

*Add 14mm for total installed height.

AC3RE

Over door heater with remote

Controls

Digitally controlled, accurate electronic thermostat.

Timer Modes: 7 Day Programmable User Timer.

Continuous Heat Modes: Manual, Runback, Fan Only, Off.

Off-board control only/requires pairing with Bluetooth remote.

Controller Functions

- Adaptive start
- Advanced time period for timer operation
- Adjustable max set point range (7-32°C)
- Bluetooth for control

Safety Features

2 x electrical hold reset cut-outs.

Colour/Finish

Pressed steel case with powder coat finish. Traffic White (RAL 9016).

Supply

None supplied.

Guarantee

2 year UK manufacturer Guarantee.

IP Rating

IP21



AC3RE



Product Dimensions

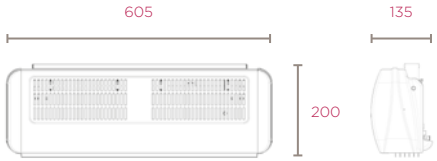

Model	Output (kW)	Air Velocity (m/s)	Noise dB (A)	Height (mm)	Width (mm)	Depth (mm)	Weight (kg)
AC3RE	1.50/3.00	6.2	50.5	200	605	135	5.3

*Add 14mm for total installed height.

AC3CE

Concealed over door heater with remote (ceiling mounted)

Controls

Digitally controlled, accurate electronic thermostat.

Timer Modes: 7 Day Programmable User Timer.

Continuous Heat Modes: Manual, Runback, Fan Only, Off.

Off-board control only/requires pairing with Bluetooth remote.

Controller Functions

- Adaptive start
- Advanced time period for timer operation
- Adjustable max set point range (7-32°C)
- Bluetooth for control

Safety Features

2 x electrical hold reset cut-outs.

Colour/Finish

Pressed steel case with powder coat finish. Traffic White (RAL 9016).

Supply

None supplied.

Guarantee

2 year UK manufacturer Guarantee.

IP Rating

IP21



AC3CE





Ceiling mounted only.
Not to be fitted to walls.

Product Dimensions

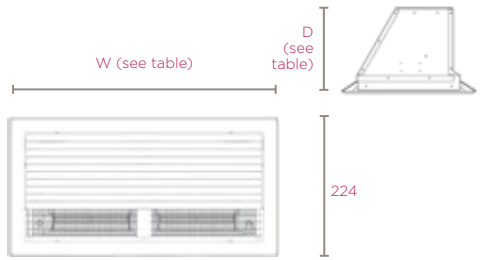

Model	Output (kW)	Air Velocity (m/s)	Noise dB (A)	Height (mm)	Width (mm)	Depth (mm)	Weight (kg)
AC3CE	1.50/3.00	8.3	52.0	224	639 (591)	282 (330)	8.7

CAB and DAB

Commercial air curtain



Controls

- Supplied with wall controls
- Master/slave (daisy-chain) connection for single control over a maximum of 10 units as one

Controller Functions

Twin fan speeds, Twin heat settings, Fan run-on circuit (3 mins), BMS/BEMS links, door sensor connections, thermostat connections, Built-in tamperproof thermostat with control wheel/Aux input for interlocks.

Safety Features

- 2 x manual reset cut-out (1m & 1.5m)
- 4 x manual reset cut-out (2m)

Colour/Finish

Pure White (RAL9010) with light grey grilles.
Steel & ABS construction.

Supply

400V ~3PN.

Guarantee

3 year UK manufacturer Guarantee.

IP Rating

IPX0

Accessories

Linking Kit CABM1 and CABRM1 (resessed)

Product Dimensions

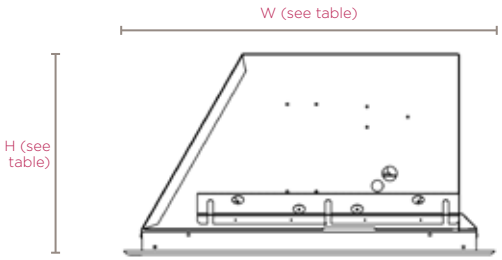

CAB and DAB recessed

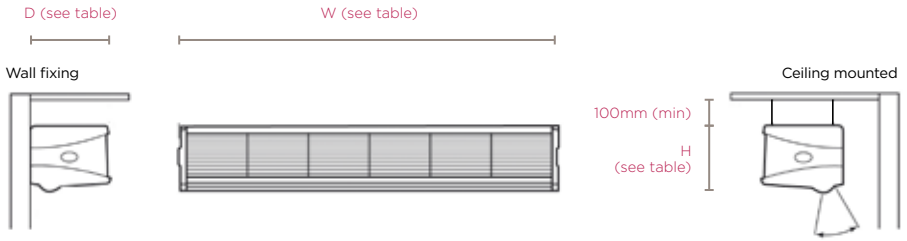

CAB and DAB

Model	Output (kW)	Air Volume (m^3/h)	Airstream width	Width (mm)	Height (mm)	Depth (mm)	Weight (kg)
Electrically heated							
CAB10E	4.5 / 9.0	1200	1.0	1065	262	321	205.5
CAB15E	6.75 / 13.5	1800	1.5	1569	262	321	29
CAB20E*	9.0/18.0	2400	2.0	2130	262	321	41
Electrically heated and recessed							
CAB10ER	4.5/9.0	1200	1.0	1224	267	639	26
CAB15ER	6.75/13.5	1800	1.5	1724	267	639	35
CAB20ER*	9.0/18.0	2400	2.0	2450	267	639	54.5

Model	Output (kW)	Air Volume (m^3/h)	Airstream width	Width (mm)	Height (mm)	Depth (mm)	Weight (kg)
Electrically heated							
DAB10E	6.0/12.0	3000	1.0	1057	360	390	26.5
DAB15E	9.0/18.0	4000	1.5	1557	360	390	35.0
DAB20E*	12.0/24.0	6000	2.0	2114	360	390	53.0
Electrically heated and recessed							
DAB10ER	6.0/12.0	3000	1.0	1224	337	667	31.5
DAB15ER	9.0/18.0	4000	1.5	1724	337	667	43.0
DAB20ER*	12.0/24.0	6000	2.0	2448	337	667	63.0

CFSE

Commercial fan heater with remote

Controls

Digitally controlled, accurate electronic thermostat.

Timer Modes: 7 Day Programmable User Timer.

Continuous Heat Modes: Manual, Runback, Fan Only, Off.

Bluetooth remote supplied with product as a standard.

Controller Functions

- Adaptive start
- Advanced time period for timer operation
- Adjustable max set point range (7-32°C)
- Bluetooth for control
- PIN Lock

Safety Features

- Electric reset cut-out (CFS30E) (115°C)
- Manual reset cut-out (CFS60E) (85°C)

Colour/Finish

Traffic White (RAL9016) with black grille bracket.

Supply

- 3 core for fused spur installation
- 1/N/PE ~230-240V, 50Hz Class I with earth wire

Guarantee

2 year UK manufacturer Guarantee.

IP Rating

IP24 (CFS30E)

IPX4 (CFS60E)





Ecodesign Compliant

BEAB Approved

Intertek

Product Dimensions

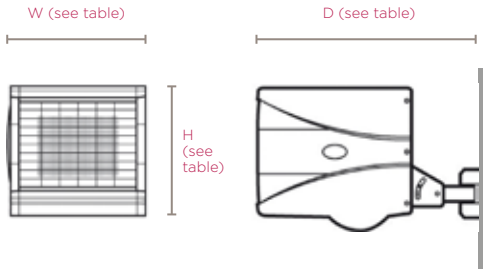

Model	Output (kW)	Air Flow (m^3/h)	Height (mm)	Width (mm)	Depth (mm)	Weight (kg)
CFS30E	3.0	400	262	306	495	7.6
CFS60E	6.0	750	360	386	565	13.5

CFH

Commercial fan heater

BEAB Approved

Intertek

Controls

Low voltage master/slave system using CAT 5 PC network cable to offer system control over a maximum of 10 heaters.*

Controller Functions

- Off / fan & two heat settings
- Multi-functional digital control over time/ thermostat/runback/programme/heat fan*

Safety Features

Manual reset cut-out.

- CFH60 - 85°C
- CFH90/120 - 115°C

Colour/Finish

Powder coated steel with plastic mouldings. White with black grille and bracket.

Supply

400V ~3PN.

Guarantee

1 year UK manufacturer Guarantee.

IP Rating

IPX4



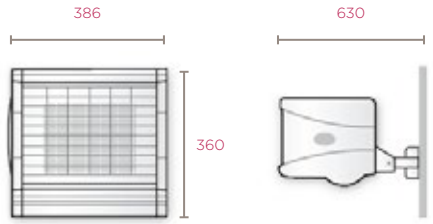

CFCH

Commercial wall controller

Controls

- Control up to 10 CFH heaters as one
- Accurate digital programming control
- 7 day time and temperature controls
- Full electronic thermostat with ambient and target temperatures
- 5 hour runback timer

Colour/Finish

White with grey buttons.

Supply

200-240v ~.

Guarantee

1 year UK manufacturer Guarantee.

IP Rating

No rating.

Heater to heater connections via industry standard PC network cable for quick and easy installation (CAT 5e ethernet / RJ45).



Product Dimensions

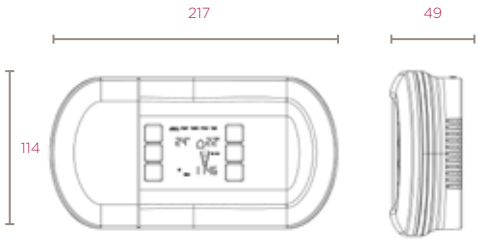

Model	Output (kW)	Air-off temp (°C)	Height (mm)	Width (mm)	Depth (mm)	Max Depth (mm)	Weight (kg)
CFH60	6.0	40	360	386	565	630	13.5
CFH90	9.0	55	360	386	565	630	14.5
CFH120	12.0	65	360	386	565	630	14.5

PFHE

Garage fan heater with remote

Controls

Digitally controlled, accurate electronic thermostat.

Timer Modes: 7 Day Programmable User Timer.

Continuous Heat Modes: Manual, Runback, Fan Only, Off.

Bluetooth remote supplied with product as a standard.

Controller Functions

- Adaptive start
- Advanced time period for timer operation
- Adjustable max set point range (7-32^{oE}C)
- Bluetooth for control
- PIN Lock

Safety Features

Thermal cut-out. Electrical reset type over-heat detection.

Colour/Finish

Grey plastic.

Supply

- 2 core for fused spur installation
- 1/N ~230-240 V, 50Hz Class II. Direct wired

Guarantee

2 year UK manufacturer Guarantee.

IP Rating

IPX0



Ecodesign Compliant

BEAB Approved

Intertek

Product Dimensions

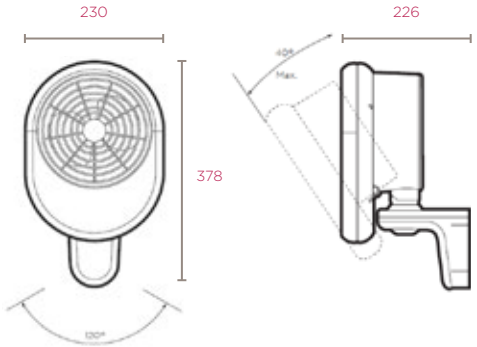

Model	Output (kW)	Air Flow (m^3/h)	Height (mm)	Width (mm)	Depth (mm)	Weight (kg)
PFH30E	3.0	200	378	230	226	1.7

OPH

Quartz patio heater

Controls

TBC

Safety Features

No cut-out on-board. Protection via RCD.

Colour/Finish

Two-tone silver.

Element

OPH13 – Twin quartz infra-red elements for smaller patios.

OPH20 – Philips halogen element.

Supply

230-240V 1P&N.

Guarantee

2 year UK manufacturer Guarantee.

IP Rating

IPX4



OPH13



OPH20

Product Dimensions

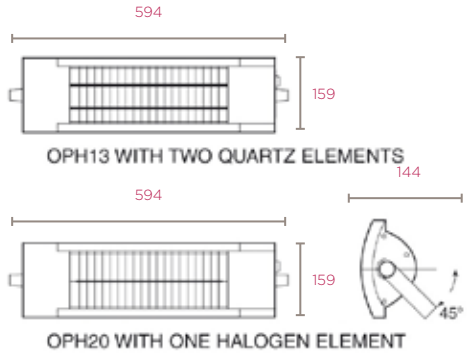

Model	Output (kW)	Height (mm)	Width (mm)	Depth (mm)	Weight (kg)	Element	Mounting Height (m)
OPH13	1.3	159	594	144	4	Infra-red	2-2.3
OPH20	2.0	159	594	144	4	Halogen	2-2.4

CXD

Ceramic heater

Controls
Push switches required for automatic control.

Safety Features
No cut-out on-board. Protection via RCD.

Colour/Finish
Powder coated steel, finished in High Temperature Matt Back.

Element
Ceramic encased aluminium coil element.

Supply
- 3 core for fused spur installation
- 1/N/PE ~230-240V, 50Hz Class I with earth wire

Guarantee
1 year UK manufacturer Guarantee.

IP Rating
IPX4



CXD2000V



CXD2000H

Product Dimensions

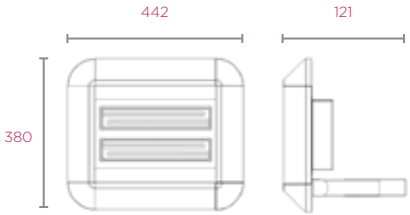

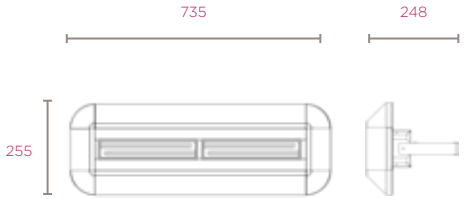

Model	Output (kW)	Number of elements	Height (mm)	Width (mm)	Depth (mm)	Weight (kg)	Recommended Installed Height (m)
CXD2000V	2.0	2	380	442	121	5.5	2.0
CXD2000H	2.0	2	255	735	248	5.2	2.0

CXDE

Ceramic heater with remote

Controls
Digitally controlled, accurate electronic thermostat.

Timer Modes: 7 Day Programmable User Timer.

Continuous Heat Modes: Manual, Frost Protect, Runback, Off.

Bluetooth remote supplied with product as a standard.

Controller Functions
- Adaptive start
- Advanced time period for timer operation
- Adjustable max set point range (7-32ºC)
- Bluetooth for control

Safety Features
No cut-out on-board. Protection via RCD.

Colour/Finish
Powder coated steel, finished in High Temperature Matt Back.

Element
Ceramic encased aluminium coil element.

Supply
- 1.3 metres fitted, 3 core for fused spur installation
- 1/N/PE ~230-240V, 50Hz Class I with earth wire

Guarantee
2 year UK manufacturer Guarantee.

IP Rating
No rating.



CXD2000V



CXD2000H



Product Dimensions

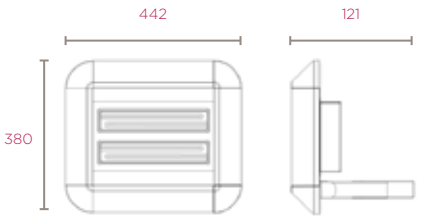

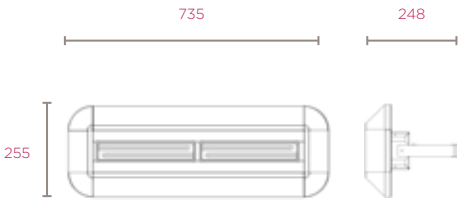

Model	Output (kW)	Number of elements	Height (mm)	Width (mm)	Depth (mm)	Weight (kg)	Recommended Installed Height (m)
CXD2000VE	2.0	2	380	442	121	5.5	2.0
CXD2000HE	2.0	2	255	735	248	5.2	2.0

QXD

Quartz heater



Controls
Push switches required for automatic control.

Safety Features
No cut-out on-board. Protection via RCD.

Colour/Finish
Powder coated steel, finished in High Temperature Matt Back.

Element
Ruby sleeved halogen lamp with tungsten element.

Supply
- 3 core for fused spur installation
- 1/N/PE ~230-240V, 50Hz Class I with earth wire

Guarantee
1 year UK manufacturer Guarantee.

IP Rating
IPX0

Product Dimensions

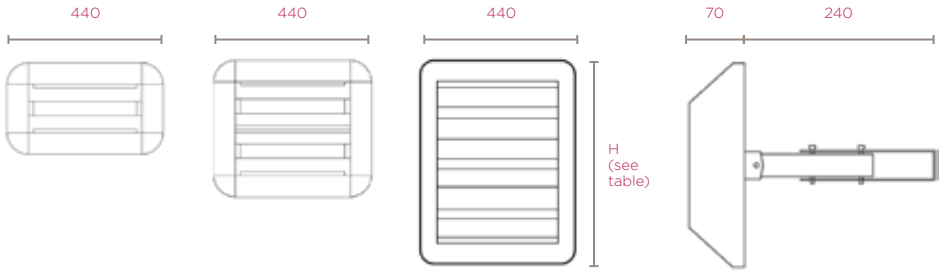

Model	Output (kW)	Number of elements	Height (mm)	Width (mm)	Depth (mm)	Weight (kg)	Recommended Installed Height (m)
QXD1500	1.5	1	256	440	70	3.7	2.5
QXD3000	3.0	2	380	440	70	4.3	3.5
QXD4500	4.5	3	506	440	70	5.8	4.0

QXDE

Quartz heater with remote





Controls
Digitally controlled, accurate electronic thermostat.

Timer Modes: 7 Day Programmable User Timer.

Continuous Heat Modes: Manual, Frost Protect, Runback, Off.

Bluetooth remote supplied with product as a standard.

Controller Functions
- Adaptive start
- Advanced time period for timer operation
- Adjustable max set point range (7-32ºC)
- Bluetooth for control

Safety Features
No cut-out on-board. Protection via RCD.

Colour/Finish
Powder coated steel, finished in High Temperature Matt Black.

Element
Ruby sleeved halogen lamp with tungsten element.

Supply
- 1.3 metres fitted, 3 core for fused spur installation
- 1/N/PE ~230-240V, 50Hz Class I with earth wire

Guarantee
2 year UK manufacturer Guarantee.

IP Rating
No rating.

Product Dimensions

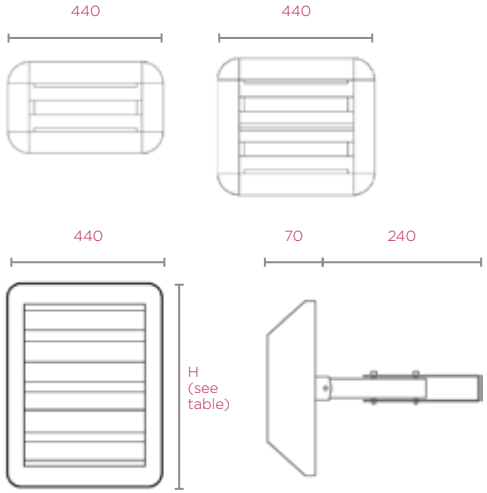

Model	Output (kW)	Number of elements	Height (mm)	Width (mm)	Depth (mm)	Weight (kg)	Recommended Installed Height (m)
QXD1500E	1.5	1	256	440	70	3.7	2.5
QXD3000E	3.0	2	380	440	70	4.3	3.5
QXD4500E	4.5	3	506	440	70	5.8	4.0

WFE

Wall fan heater with remote

Controls

Digitally controlled, accurate electronic thermostat.

Timer Modes: 7 Day Programmable User Timer.

Continuous Heat Modes: Manual, Frost Protect, Runback, Off.

Bluetooth remote supplied with product as a standard.

Controller Functions

- Heat Selection: High/Low
- Adaptive start
- Advanced time period for timer operation
- Adjustable max set point range (7-32ºC)
- Bluetooth for control

Safety Features

Electrical reset, self-hold cut-out.

Colour/Finish

- Black body with Cherry wood side panels
- Silver body with Black side panels

Element

Stitched element with integral thermal cut-out.

Supply

- 1.3 metres fitted, 3 core for fused spur installation
- 1/N/PE ~230-240V, 50Hz Class I with earth wire

Guarantee

2 year UK manufacturer Guarantee.

IP Rating

No rating.



WFE3BE



WFE3SE



Ecodesign Compliant

BEAB Approved

Intertek

Product Dimensions

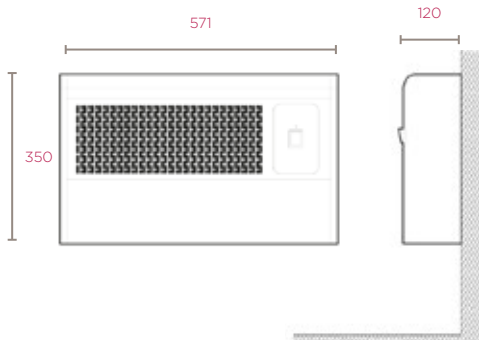

Model	Colour	Output (kW)	Height (mm)	Width (mm)	Depth (mm)	Weight (kg)
WFE3BE	Black	3.0	350	571	120	7.6
WFE3SE	Silver	3.0	350	571	120	7.6

HAW

Heavy duty air warmers

Safety Features

Manual reset thermal cut-out.

Colour/Finish

Cast iron body. Black stove enamel finish.

Black wire guard.

Element

Metal sheathed.

Supply

230-240V 1P&N.

Guarantee

1 year UK manufacturer Guarantee.

IP Rating

IPX4



Product Dimensions

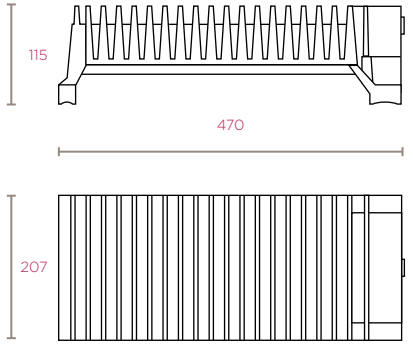

Model	Output (kW)	Height (mm)	Width (mm)	Depth (mm)	Weight (kg)
HAW1000N	1.0	115	470	207	14

*Also available with optional mounting kit which allows units to be hung using c-clamp or fixed to parasol pole.

Commercial Heating



Water Heating and Renewable Technology

QWCd

Quantum, the world's most advanced direct-electric hot water cylinder

Controls

Electronic thermostatic control with internet-connected smartphone app connectivity for remote operation (a DimplexHub is required).

Safety Features

- Manual reset thermal cut-out
- Legionella purge

Colour/Finish

Black.

Element

1 ¾" M BSP 3kW immersion and boost element.

Supply

1/N/PE 230-240V, 50Hz (Peak/Off Peak).

Guarantee

- Inner cylinder - 25 year UK manufacturer Guarantee on parts and labour
- Immersion heaters - 2 year UK manufacturer Guarantee (excluding the effects of limescale)
- Other components - 2 year UK manufacturer Guarantee

IP Rating

IPX1



C

kiwa approved product

Product Dimensions

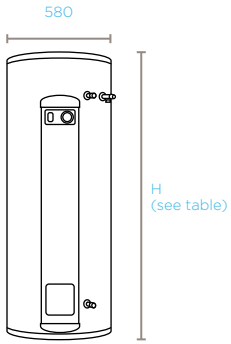

Dimplex Control
See page 10 for details

Model	Volume (L)	Height (mm)	Diameter (mm)	T&P Valve (mm)	Imm. 1 (mm)
QWCd125-580RF	125	945	580	24	122
QWCd150-580RF	150	1115	580	27	150
QWCd210-580RF	210	1490	580	34	218
QWCd250-580RF	250	1765	580	42	284
QWCd300-580RF	300	2065	580	48	313

QWCd Slimline

Quantum, the world's most advanced direct-electric hot water cylinder

Controls

Electronic thermostatic control with internet-connected smartphone app connectivity for remote operation (a DimplexHub is required)

Safety Features

- Manual reset thermal cut-out
- Legionella purge

Colour/Finish

Black.

Element

1 ¾" M BSP 3kW immersion and boost element.

Supply

1/N/PE 230-240V, 50Hz (Peak/Off Peak).

Guarantee

- Inner cylinder - 25 year UK manufacturer Guarantee on parts and labour
- Immersion heaters - 2 year UK manufacturer Guarantee (excluding the effects of limescale)
- Other components - 2 year UK manufacturer Guarantee (excluding the effects of limescale)

IP Rating

IPX1



C

kiwa approved product

Dimplex Control

See page 10 for details

Product Dimensions

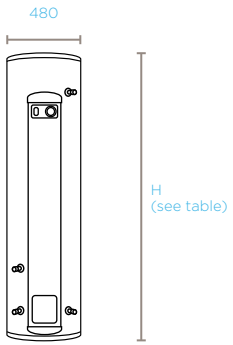

Model	Capacity (L)	Height (mm)	Diameter (mm)	Weight (kg)	Reheat (mins)
QWCd135-480RF	135	1387	480	22	132
QWCd180-480RF	180	1761	480	30	200

ECSd Direct Water Cylinder

EC Unvented Stainless Steel Direct Hot Water Cylinders

Controls

Mechanical thermostat control.

Safety Features

Manual reset thermal cut-out.

Colour/Finish

Black.

Element

Electronic thermostat control.

Supply

1 ¾" M BSP 3kW immersion and boost element.

Guarantee

- Inner cylinder - 25 year UK manufacturer Guarantee on parts and labour
- Immersion heaters - 2 year UK manufacturer Guarantee (excluding the effects of limescale)
- Other components - 2 year UK manufacturer Guarantee

IP Rating

IPX1



C

kiwa approved product

Product Dimensions

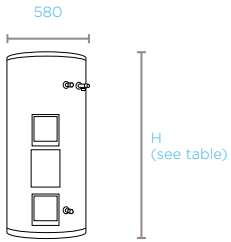

Model	Capacity (L)	Height (mm)	Diameter (mm)	Weight (kg)	Reheat (mins)
ECSd100-580	100	795	580	20	88
ECSd125-580	125	945	580	23	122
ECSd150-580	150	1115	580	27	150
ECSd175-580	175	1265	580	29	170
ECSd210-580	210	1490	580	34	218
ECSd250-580	250	1765	580	42	284
ECSd300-580	300	2065	580	48	313

EDL

Edel RF Air Source Heat Pump Hot Water Cylinders

Controls

Electronic thermostatic control with internet-connected smartphone app connectivity for remote operation (a DimplexHub is required).

Safety Features

Manual reset thermal cut-out.

Colour/Finish

Grey plastic casing .

Supply

230V~ 50Hz 1P&N.

Guarantee

Inner stainless steel vessel 5 years UK manufacturers guarantee. Other components 2 years UK manufacturers guarantee

IP Rating

IPX1



A+

kiwa approved product

Product Dimensions

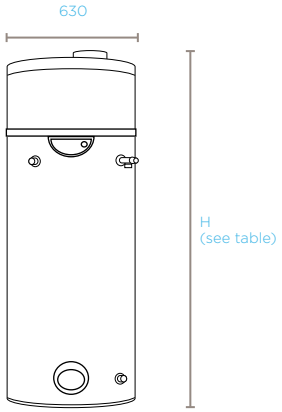

Dimplex Control

See page 10
for details

Model	COP	Nominal volume (l)	Diameter (mm)	Height (mm)	Weight (kg)
EDL200UK-630RF	3.36	200	630	1460	56.5
EDL270UK-630RF	3.30	270	630	1780	63



For single properties please complete a heat design form (page 87) and send it with a sketch plan to our heating design department. We aim to provide an accurate assessment within seven working days. For multiple properties, please send us comprehensive scale drawings (scale 1:50 or 1:100) together with construction details and any other relevant information. We offer a fourteen working day service for this type of assessment.

Heater Sizing Tables

These tables provide heater-sizing guidance for traditional electric heating systems, including Quantum, storage heaters and panel heaters.

Living or dining room: Quantum off-peak heaters are recommended

Heater loading in kW. Temperature 21°C

Floor area	Solid walls No. of outside walls			Cavity walls No. of outside walls			Insulated cavity walls No. of outside walls		
m²	1	2	3	1	2	3	1	2	3
12	1.84	2.16	2.88	1.60	1.92	2.48	1.12	1.28	1.68
16	2.08	2.48	3.20	1.84	2.32	2.88	1.36	1.60	1.92
20	2.64	3.12	3.92	2.32	2.72	3.44	1.68	1.92	2.32
24	2.96	3.44	4.32	2.64	3.12	3.76	2.08	2.32	2.64
28	3.28	3.92	4.80	2.96	3.44	4.24	2.16	2.48	2.96
32	3.52	4.32	5.28	3.28	3.76	4.72	2.40	2.72	3.20

Bedrooms: panel heaters are recommended

Heater loading in kW. Temperature 18°C

Floor area	Solid walls No. of outside walls			Cavity walls No. of outside walls			Insulated cavity walls No. of outside walls		
m²	1	2	3	1	2	3	1	2	3
15	2.16	2.96	4.08	2.00	2.56	3.52	1.68	2.08	2.64
20	2.64	3.52	4.48	2.40	3.12	4.00	2.08	2.56	3.12
25	2.96	4.08	5.20	2.72	3.68	4.56	2.40	3.04	3.60
30	3.52	4.72	5.84	3.36	4.24	5.20	2.88	3.52	4.16
40	4.80	5.92	7.68	4.40	5.36	6.72	3.92	4.48	5.36
50	5.28	6.80	8.40	4.96	6.24	7.44	4.48	5.28	6.08

Heater Sizing Tables

Kitchen

Heater loading in kW. Temperature 18°C

Floor area	Solid walls No. of outside walls			Cavity walls No. of outside walls			Insulated cavity walls No. of outside walls		
m²	1	2	3	1	2	3	1	2	3
10	1.28	1.68	2.32	1.12	1.60	1.92	For all kitchens with cavity wall insulation, direct heating is preferred		
12	1.52	2.16	2.64	1.36	1.84	2.32			
14	1.68	2.40	2.88	1.60	2.08	2.48			
16	1.92	2.64	3.12	1.68	2.32	2.72			

Commerical heating: Quantum off-peak heaters are recommended. Sizing is based on a single storey with a ceiling height of 3m and a minimum of 75mm of roof insulation.

Office

Heater loading in kW. Temperature 21°C

Floor area	Solid walls No. of outside walls			Cavity walls No. of outside walls			Insulated cavity walls No. of outside walls		
m²	1	2	3	1	2	3	1	2	3
15	2.16	2.96	4.08	2.00	2.56	3.52	1.68	2.08	2.64
20	2.64	3.52	4.48	2.40	3.12	4.00	2.08	2.56	3.12
25	2.96	4.08	5.20	2.72	3.68	4.56	2.40	3.04	3.60
30	3.52	4.72	5.84	3.36	4.24	5.20	2.88	3.52	4.16
40	4.80	5.92	7.68	4.40	5.36	6.72	3.92	4.48	5.36
50	5.28	6.80	8.40	4.96	6.24	7.44	4.48	5.28	6.08

Cable Entry Points

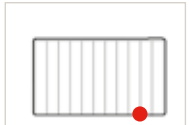
Q-Rad

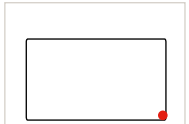
Girona


Monterey

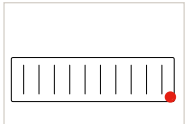
Saletto

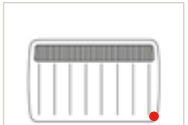
PLXE

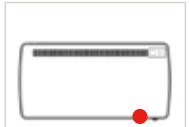
LST

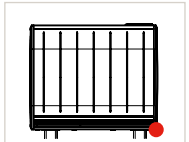
Quantum


XLE

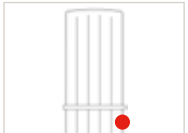
BPH

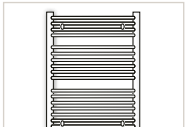
TDTR

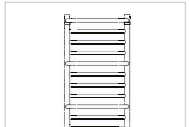
CPTS

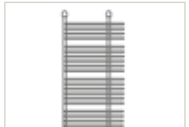
BR


TTR


S

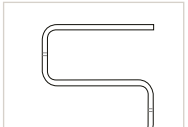
LSTS

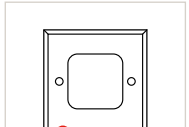
FSC

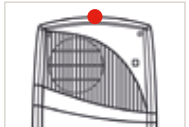
FX20VE


FX20EIPX4


BFHE

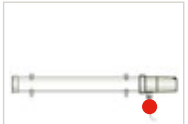
ECOT

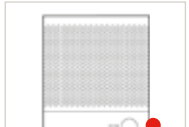
MPH


DXLWP


IRX

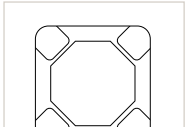
RUG3TS


ECR


OCR


OFX


DXU

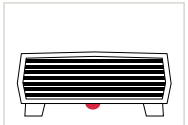
DXFF


DXC

Cable Entry Points

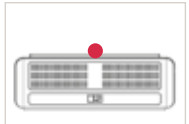
AC

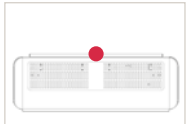
AC3RE

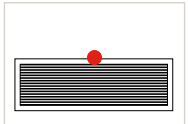
AC3CE

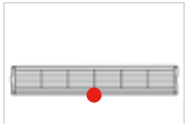
CAB

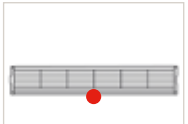
DAB


CFH

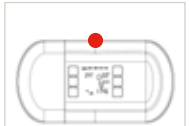
CFCH

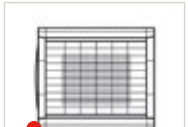
CFSE


PFHE

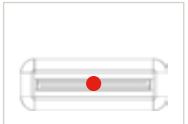
CXD

QXD

CXDE

QXDE

OPH

WFE

HAW

QWCd

QWCd Slimline

ECSd

EDL

Heating Design Request Form

Complete and return to: Millbrook house, Grange Drive, Hedge End, Southampton. SO30 2DF
Email: presales@glendimplex.com
Alternatively complete online at www.dimplex.co.uk/heatdesign

Customer name and address (please note: we are unable to complete the scheme unless full name and address details are included)

Contact Name:	Co. Name:	
Address:		
	Postcode:	
Email:	Tel:	Fax:

Site name and address

Type of property (for a flat, please tick 'semi-detached' unless there are other flats on both sides, in which case tick 'terrace')

☐ House	☐ Bungalow	☐ Flat	☐ Detached	☐ Semi-detached	☐ Terraced	Other (please specify)

Type of construction (tick where appropriate)

Cavity wall	☐ Yes	☐ No	Roof	☐ Pitched	☐ Flat				
With insulation	☐ Yes	☐ No	Insulation	☐ None	☐ 100mm	☐ 150mm	☐ 200mm		
Solid walls	☐ Yes	☐ No	Glazing	☐ Single	☐ Double				
Floor	☐ Yes	☐ No		Approximate age of property:					

Products to be specified (tick where appropriate)

Please list below the product ranges you would like us to base the scheme on. Alternatively, leave blank and we will match the right products to your property.

Would you like us to include:

Water Heating ☐ Yes ☐ No

Type of room (e.g. Living/bedroom)	Area (m^2)	Floor to ceiling height	External wall length	Window area (m^2)	External door area (m^2)	Length to unheated areas	Is room above heated?	Roof above?	Open fireplace?

Why register your products with us?

Faster Customer Service

Once you have registered your product, our customer service team wil be able to quickly access your details when you contact us, allowing them to help you sooner.

Guarantee Management

Upon registration, you will receive a confirmation email including a summary of your product guarantee, a copy of our terms and conditions and a copy of your proof of purchase (optional).

Product Recall Notification

If your product is registered you will automatically be contacted with applicable safety notifications, or in the unlikely event of a product recall.

Please register your product with us within 28 days of date of purchase to enable us to provide efficient customer service if you need to contact us, to contact you in the event of a product or safety update, to extend your guarantee where applicable, and, if you choose, to send you additional information about our products and services.

Register your product at **www.gdhv.co.uk/register**, or if you do not have access to the internet, call us on **0344 879 3588**.

On registering you will automatically receive a copy of the terms and conditions of your guarantee, which can also be downloaded at any time from https://www.gdhv.co.uk/guarantee-terms-and-conditions. If you do not have access to the internet, call us on 0344 879 3588 and we will send them to you by post.

Notes

Bathrooms

Any electrical appliances installed in a bathroom should be fitted by a competent electrician in accordance with the current I.E.E. Regulations.

Safety

Dimplex products are designed to comply with the requirement of EN60335 part 1 of the British Standard covering the safety requirements of electric heating appliances, and momentary contact with any part of the heater should not cause injury. However, in order to be effective, heaters or towel rails of any type do get hot especially (if applicable) around the air outlet grille. Therefore if aged or infirm persons, or young children, are likely to be unsupervised in the vicinity of a heater we advise precautions should be taken. We recommend a guard is fitted around the heater, as is normal with many types of heating appliance in similar circumstances, to ensure contact with the heater is avoided and objects cannot be inserted into the product. Heating appliances should never be covered or positioned where objects may fall onto them.

CE Mark

All our products carry the CE mark complying with European safety standards and the European Standard for electro magnetic compatibility.

CE

Plugs

All portable appliances are supplied with a fitted plug. We do not recommend using an extension lead with our products.

Specifications

Dimplex policy is one of continuous improvement; we reserve the right to alter specifications without notice. Although every care has been taken in the reproduction of product finishes in this brochure, the colour photographs should be taken only as a guide. The information contained in this brochure is correct at the time of printing. You are advised to consult your dealer before purchasing.

Installation Guidance

This brochure is not intended as an installation guide. For safety, products should only be installed by a competent person, in accordance with current regulations and the manufacturer's instructions. Please note that the dimensions contained within this brochure do not in all cases include clearances required around installed products for safe operation.

The Dimplex Range

Dimplex offers the widest range of electric space heating solutions in the UK. In addition to this publication, we have a number of more focused brochures. These can be ordered via our website. www.dimplex.co.uk

To find out more about how our team can help you to specify compliant, efficient and intelligent heating solutions, contact us on:

Web: **www.dimplex.co.uk**
Call: **0344 879 35 88**

Ireland enquiries: Glen Dimplex Ireland, tel: 00 353 (1) 8424 277 email: saleslreland@glendimplex.com
or web: www.glendimplexireland.com

beama
REGISTERED MEMBER
ECA

Dimplex®

FSC LOGO

Dimplex is a Glen Dimplex Heating & Ventilation brand. Millbrook House, Grange Drive, Hedge End, Southampton SO30 2DF

All the products shown in this brochure are protected by intellectual property rights own by members of the Glen Dimplex Group on an international basis. The Glen Dimplex group of Companies will actively protect these rights. Products within the Quantum range are protected by one or more of the following patents and patent applications: Great Britain GB2481048, GB 2487147, GB 2487148, GB 1101971.8, GB 1205302.1, GB 1212547.2, GB1212546.4, GB 1304025.8 Australia AU 2011263698, Canada CA 2,801,973, Chile CL 03468-2012, European EP 11731288.4, New Zealand NZ 604163, South Africa ZA 2012/09378, United States US 13/703,068, China CN 201180037404.2, Japan JP 506280052 © Dimplex. All rights reserved. Material contained in this publication may not be produced in whole or in part without prior permission in writing.

D1837/0121