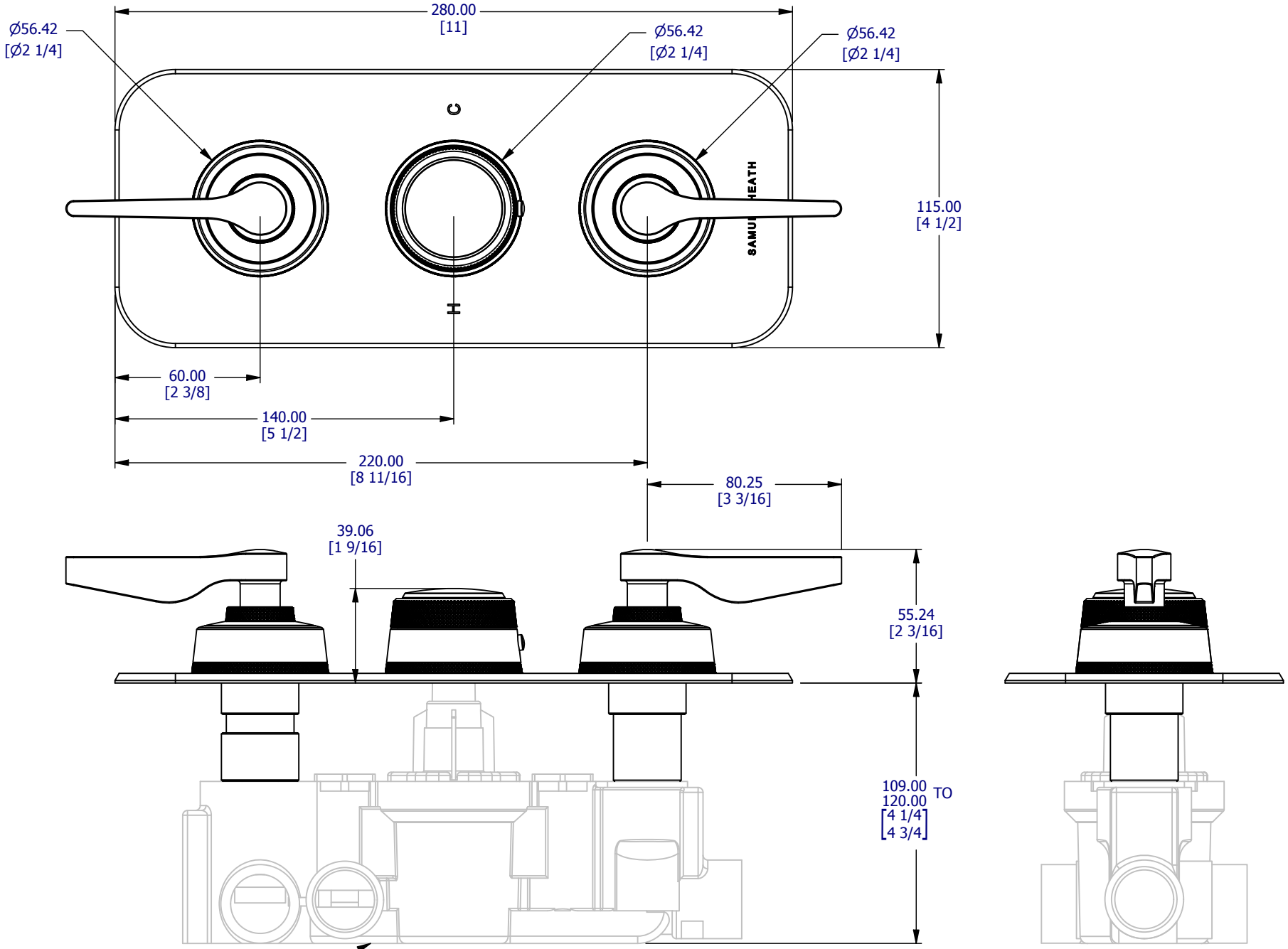

SEE INSTALLATION KIT DRAWING
UK & EU: V132-IS-XX
US: V132-AIS-XX

PROPERTY OF SAMUEL HEATH ©			DESIGNER		P.BIRAN	
A4	DRG No	T1003-LA	ISSUE NO.	A	ISSUE DATE	22/01/20