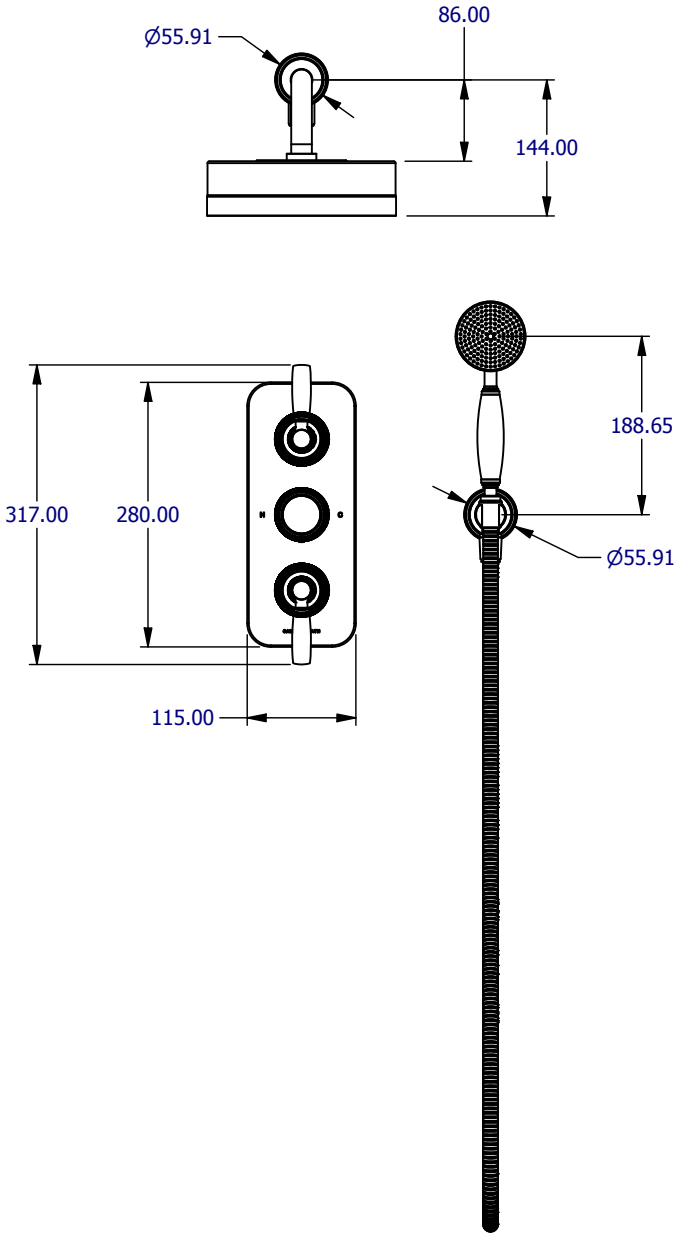

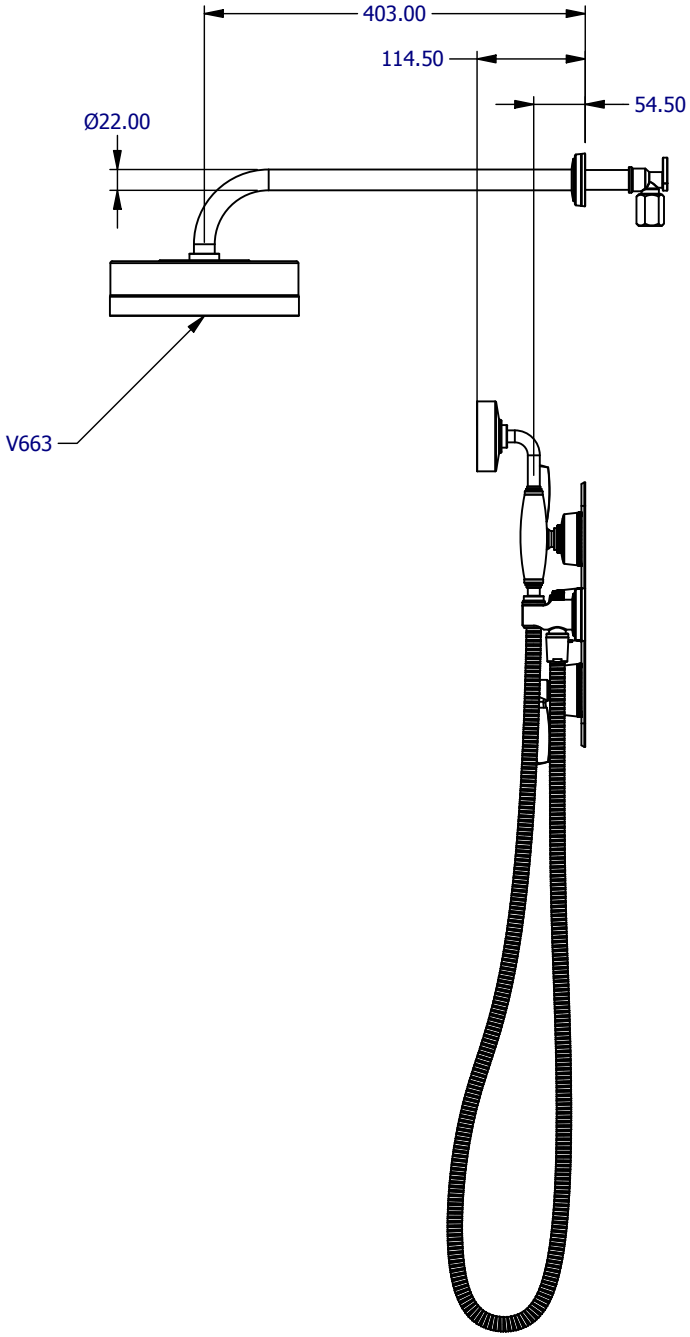

PROPERTY OF SAMUEL HEATH ©			DESIGNER		P.BIRAN	
A4	DRG No	T10B2A-LB	ISSUE NO.	A	ISSUE DATE	20/02/20