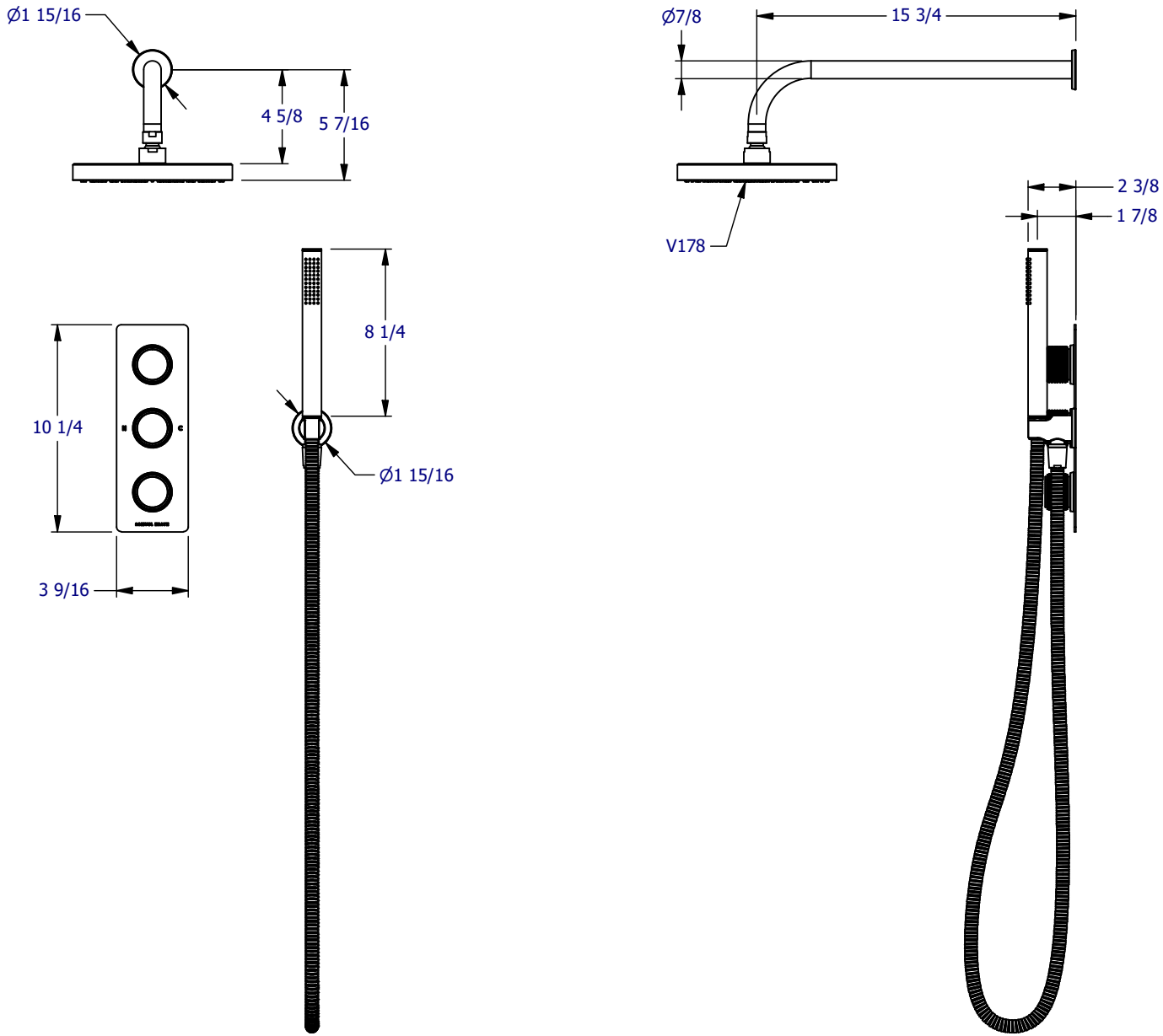

PROPERTY OF SAMUEL HEATH ©			DESIGNER		C.DANKS	
A4	DRG No	T20B2ACPR	ISSUE NO.	A	ISSUE DATE	17.11.22