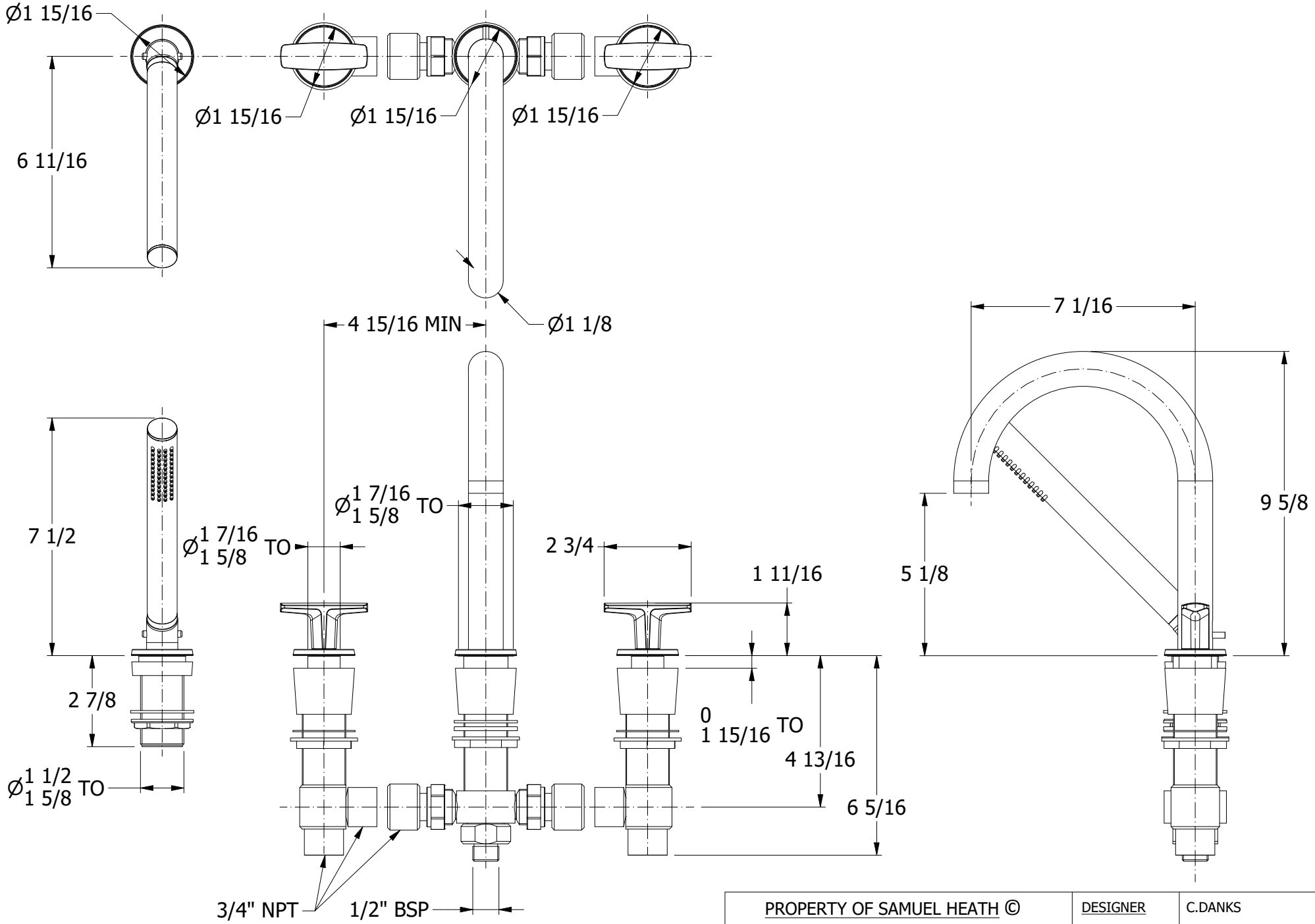

PROPERTY OF SAMUEL HEATH ©			DESIGNER		C.DANKS	
A4	DRG No	T20KA48-CBA	ISSUE NO.	A	ISSUE DATE	31.10.22