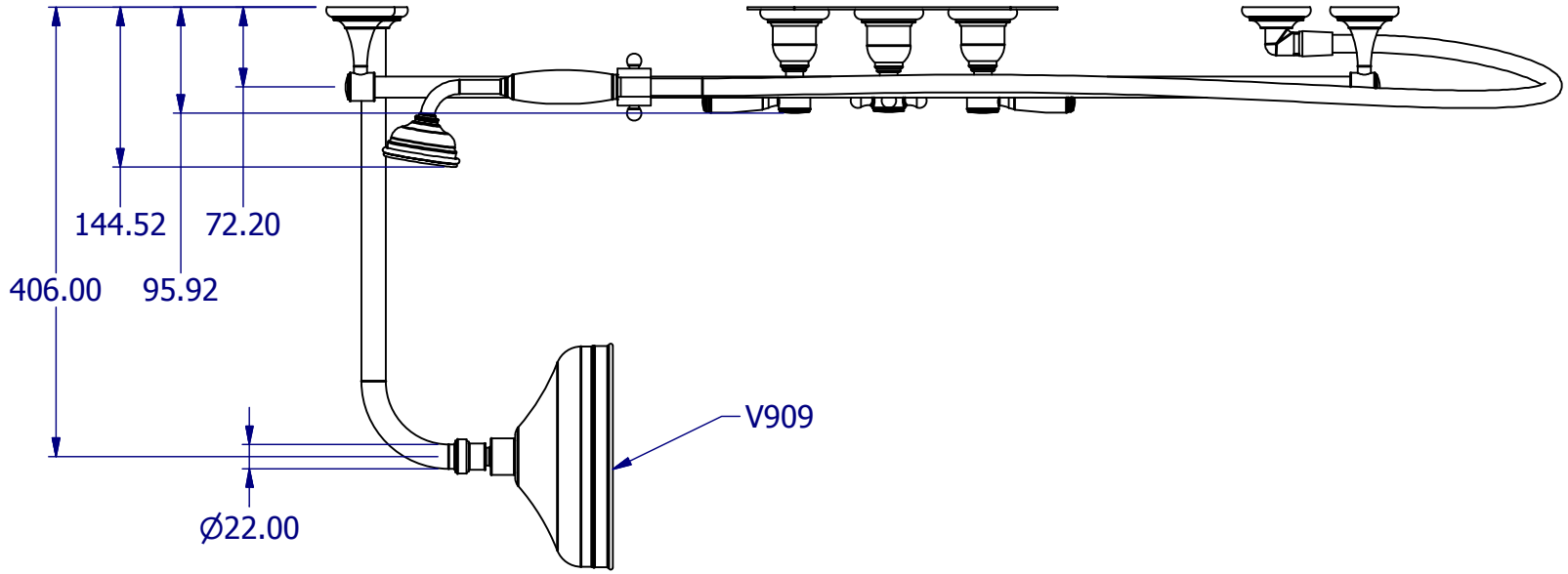

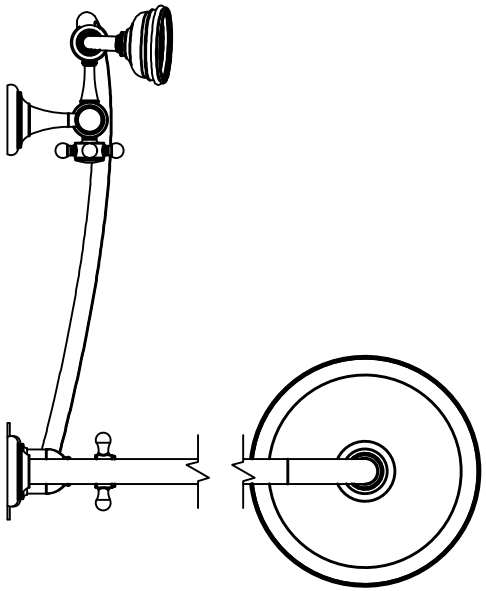

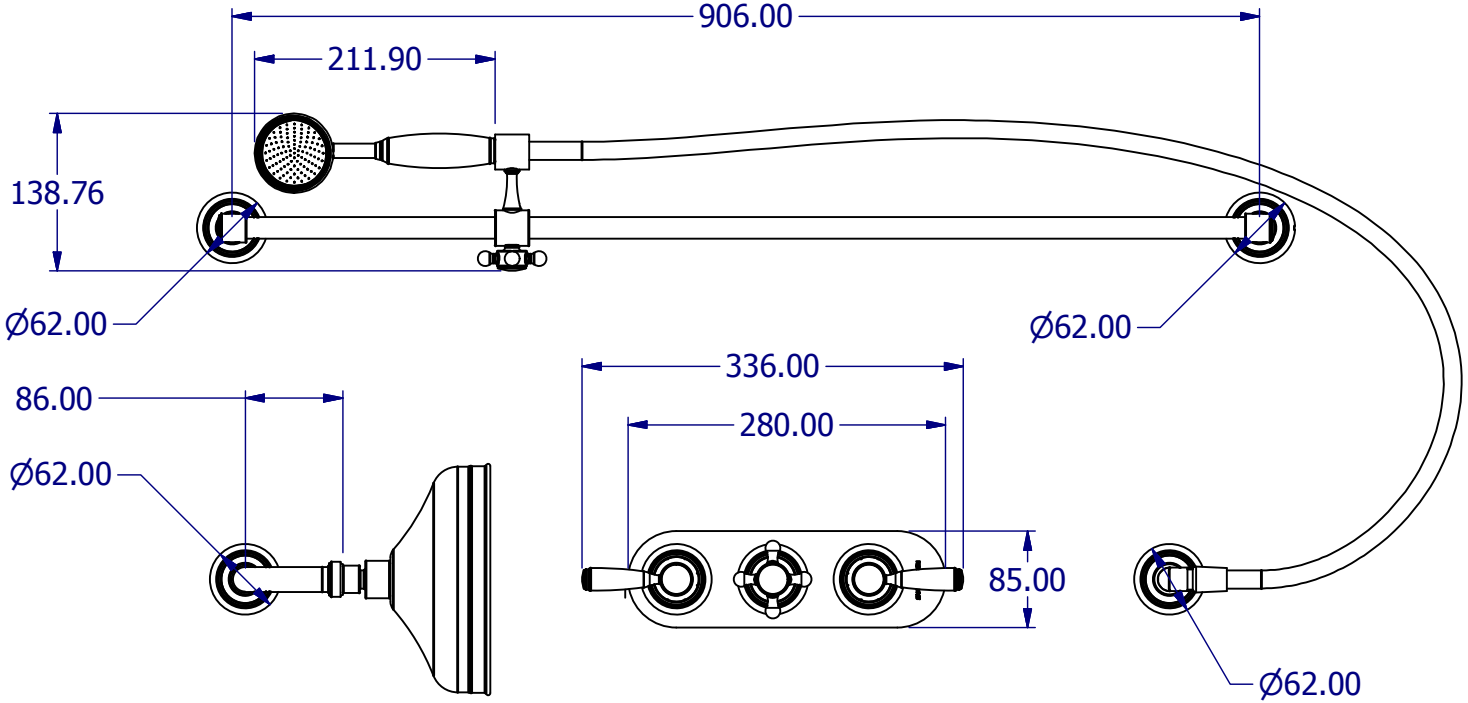

A4	DRG No	V2B1XC V2B1XM V2B1XW	ISSUE NO.	A	ISSUE DATE	23/7/10