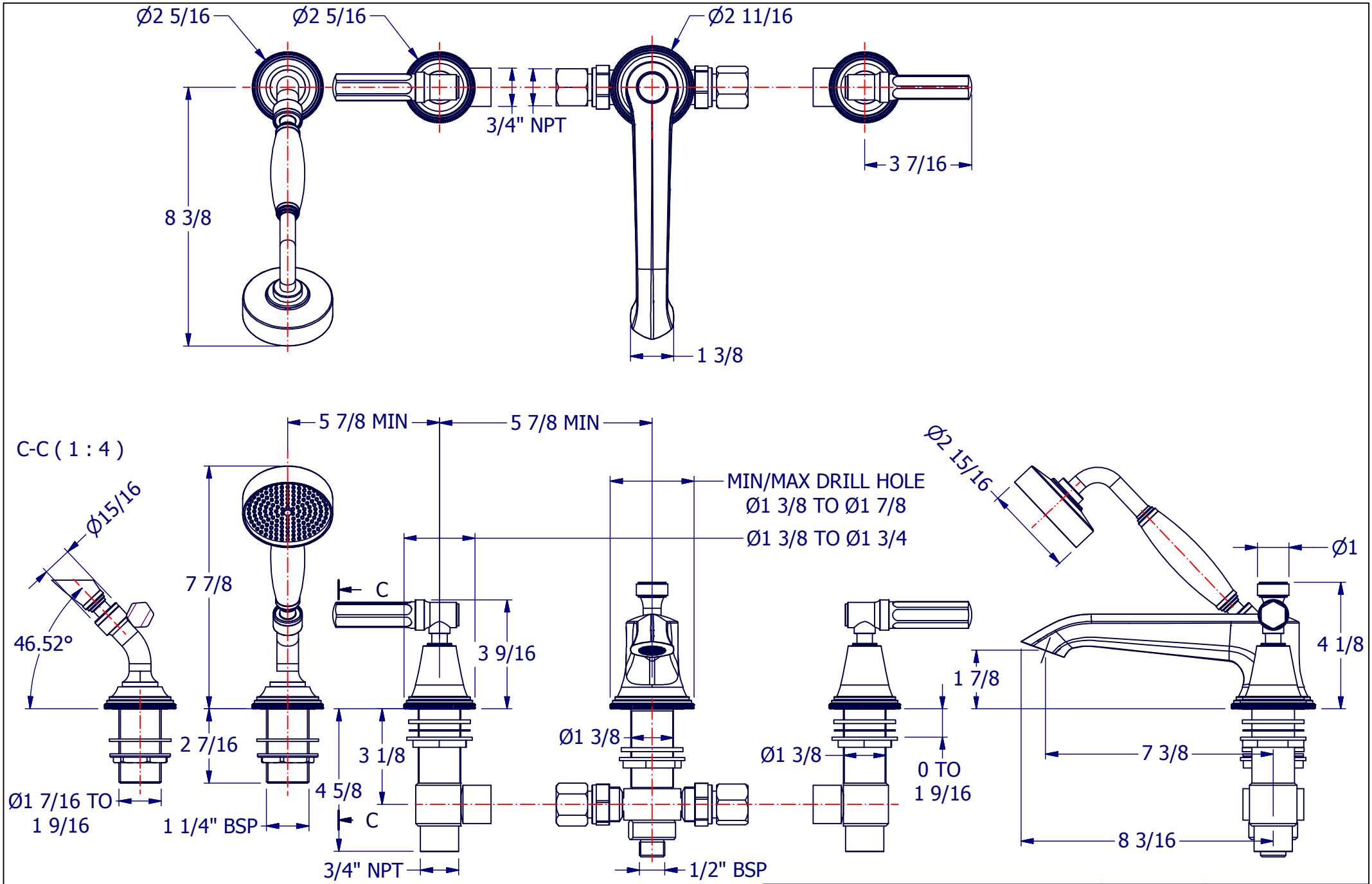


| | | | | | | |
|---|---|---|---|---|---|---|
| PROPERTY OF SAMUEL HEATH © | | | DESIGNER | | ANTONIO DUGGAL | |
| A4 | DRG No | V6KA48-L | ISSUE NO. | A | ISSUE DATE | 31/07/18 |