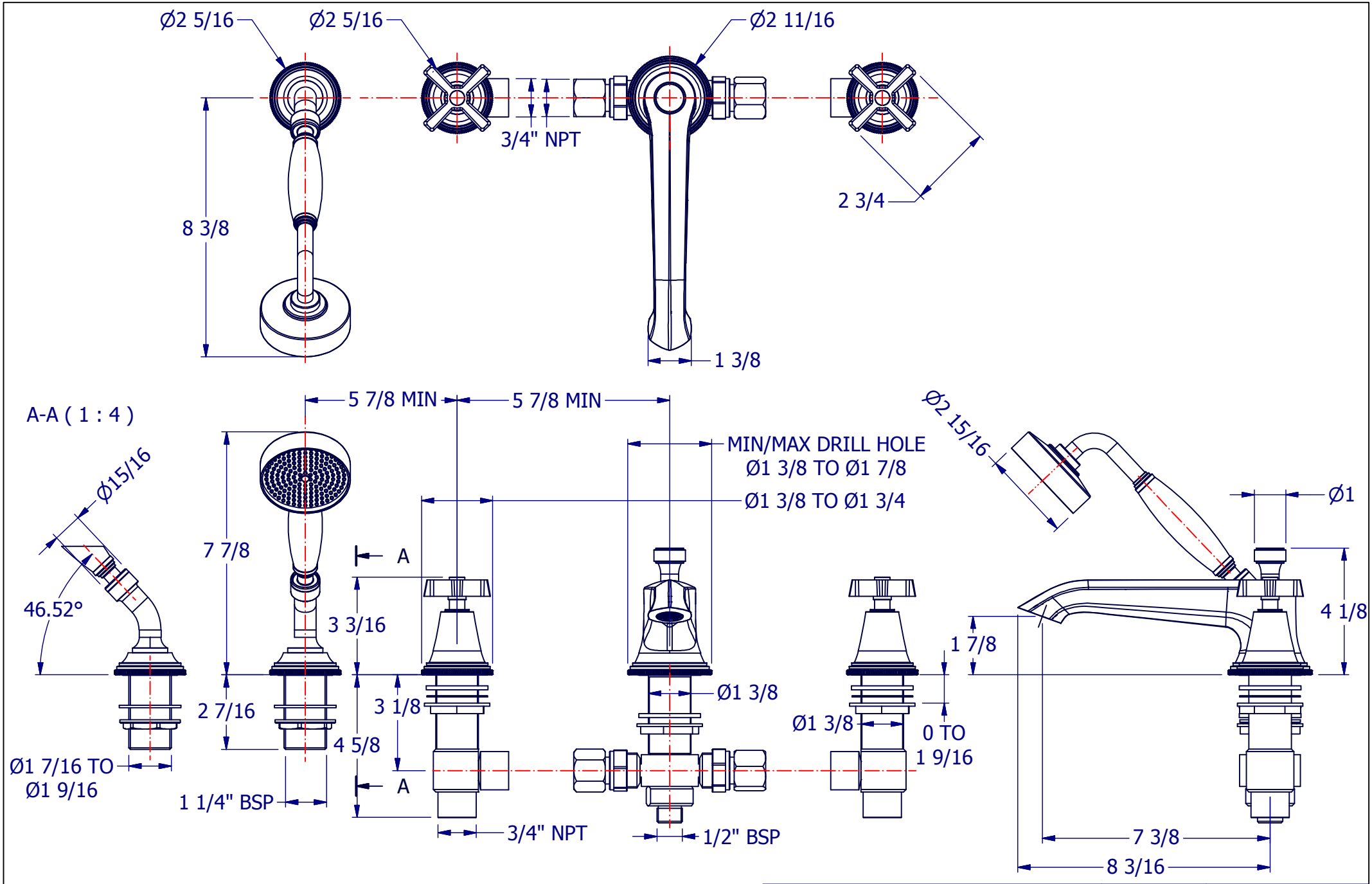

PROPERTY OF SAMUEL HEATH ©			DESIGNER		ANTONIO DUGGAL	
A4	DRG No	V6KA48-X/XB	ISSUE NO.	A	ISSUE DATE	31/07/18