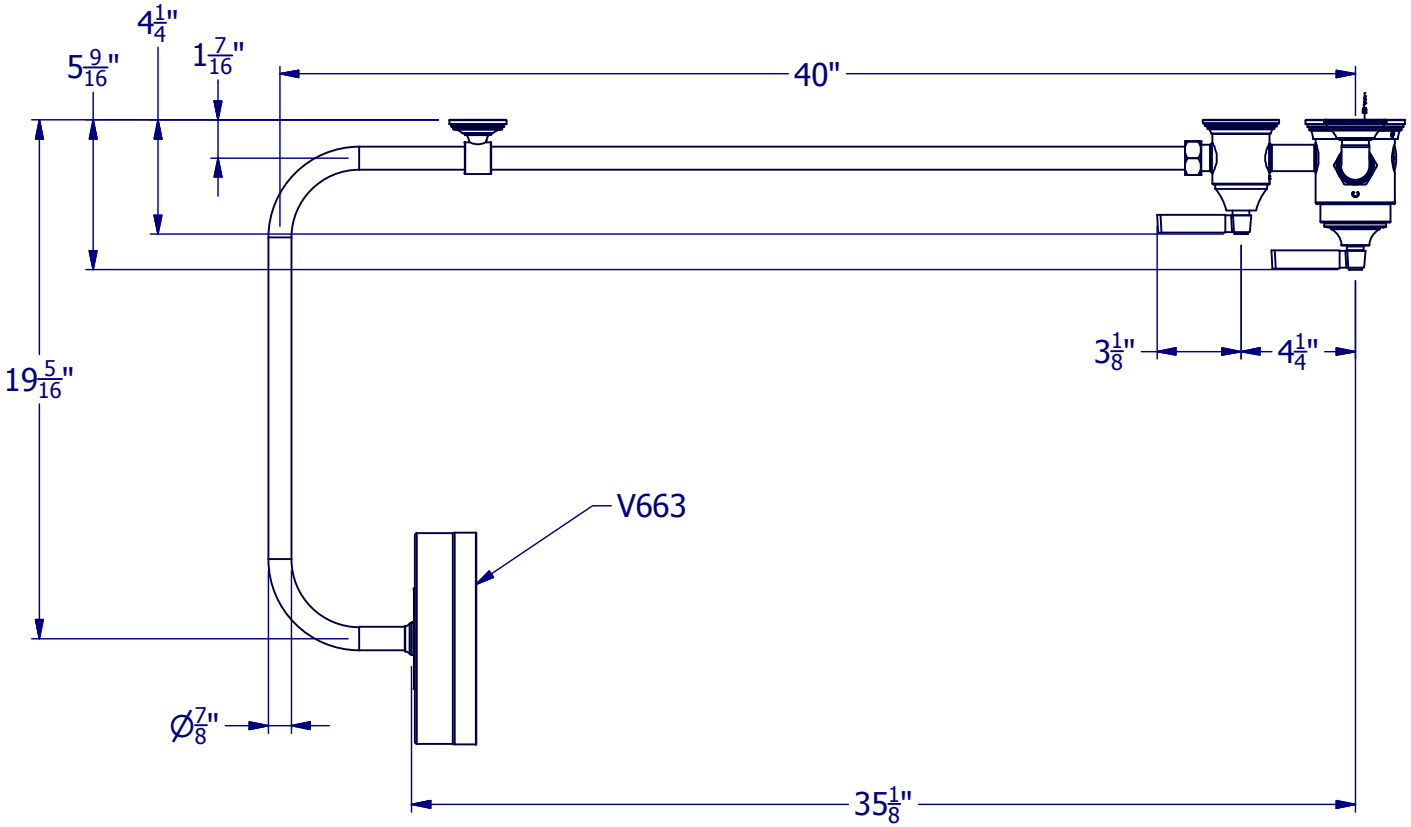

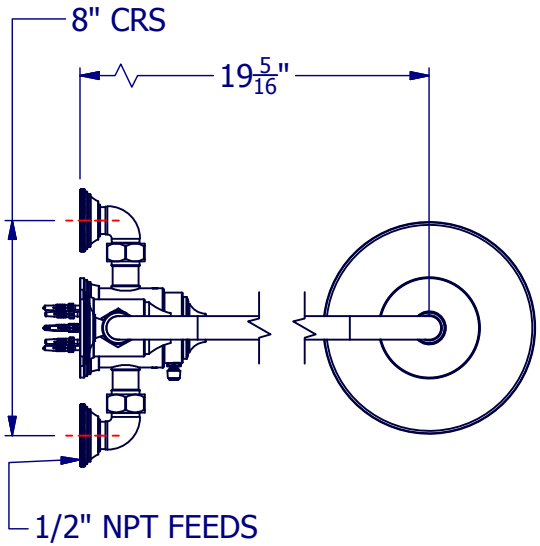

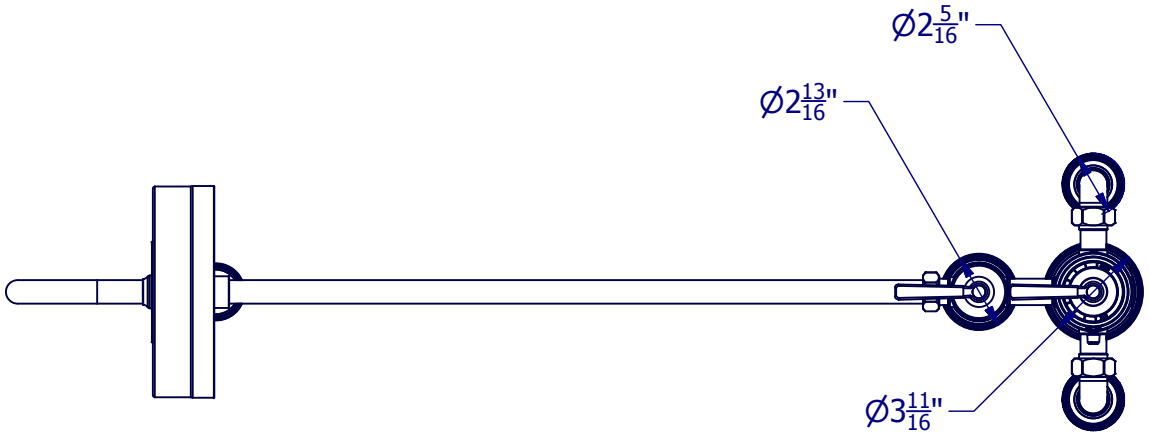

A4	DRG No	V6KA7MM & V6KA7MMB	ISSUE NO.	A	ISSUE DATE	192/9/12