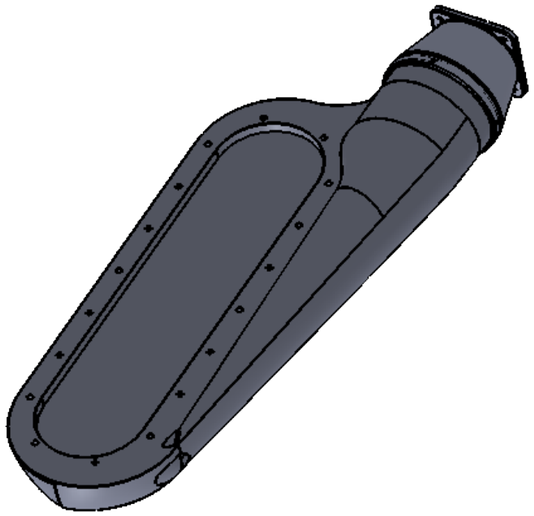

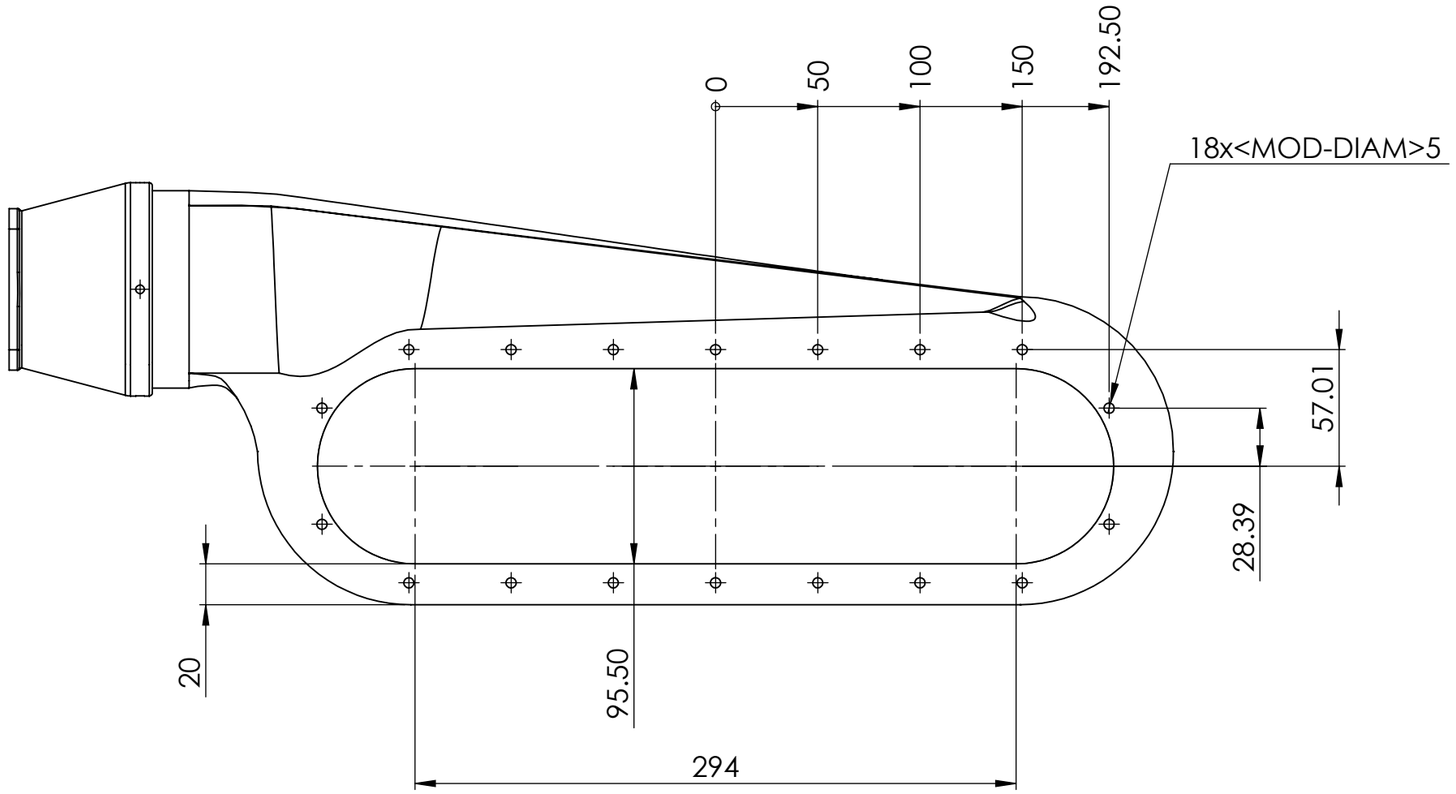


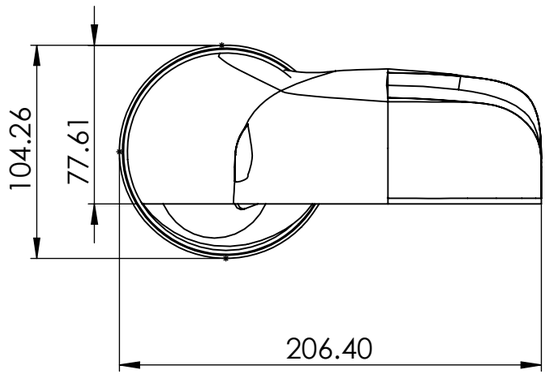


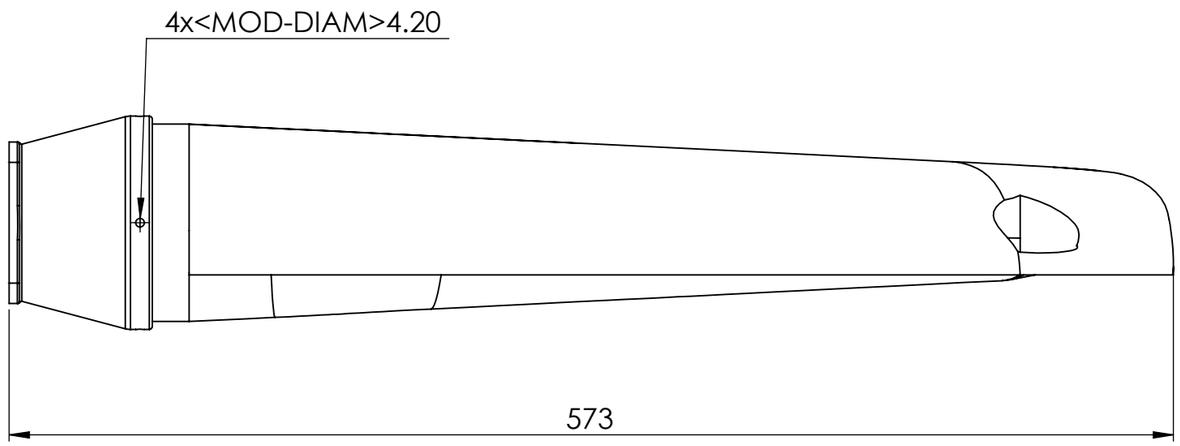


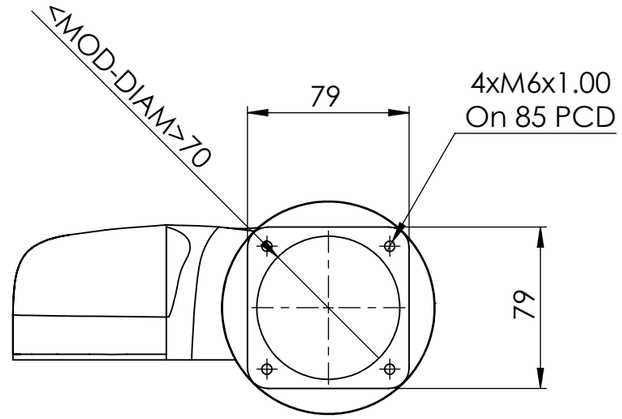


Thickness of the shell : 2.76 mm

| ISSUE | DESCRIPTION | INITIALS | E.C.N. No | DATE |
|---|---|---|---|---|
| 1 | ORIGINAL ISSUE | SV | | 24/09/2012 |

ALL DIMENSIONS IN MILLIMETERS

TOLERANCES (AT 20C) UNLESS OTHERWISE STATED

| NOMINAL LINEAR DIMENSIONS | | |
|---|---|---|
| OVER-INCL | <0.00 | 0.00 |
| 0-200 | +/- 0.50 | +/- 0.15 |
| 250-1000 | +/- 1.00 | +/- 0.20 |
| 1000 PLUS | +/- 2.00 | +/- 0.30 |

SURFACE FINISHES
MILLING N8
TURNING N7
GRINDING N6

ANG DIMS +/- 0.5'

REMOVE ALL BURRS AND SHARP EDGES UNLESS OTHERWISE STATED

HOLES TO BS4500 1985.

THREADS TO BS3643 1981 METRIC COURSE.

BSP THREADS TO BS 2779 MED FIT

THIS A DRAWING IS A PRIVATE AND CONFIDENTIAL COMMUNICATION

REVERIE

Reverie Limited
Unit 2 Chandlers Row
Colchester
Essex
CO1 2HG
01206 866663
www.reverie.ltd.uk

DRAWN SV
APP
DATE 24/09/2012
FINISH Polished
SCALE Do Not Scale Drawing
Weight

TITLE R01SE0485-Fontana Plenum 65x LH S2000
MATERIAL Carbon Fibre
Matl.Stk Code
DRG. No. R01SE0485
SHEET 1 of 1