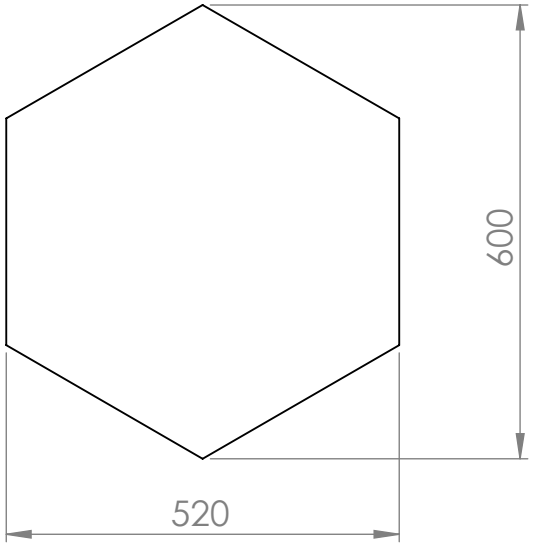
600
520

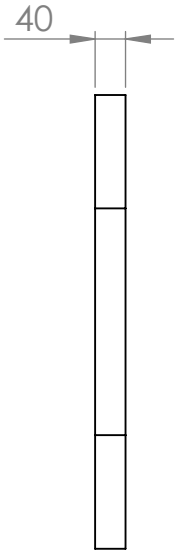
40

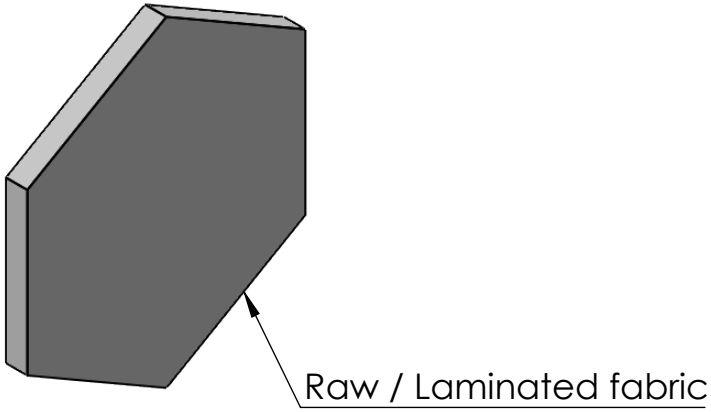
Raw / Laminated fabric