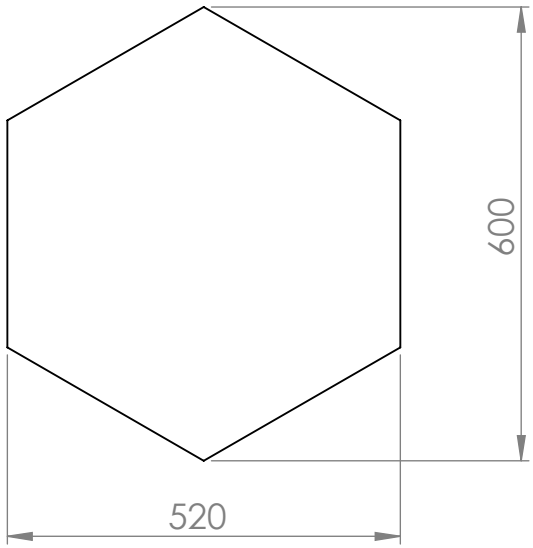
600
520

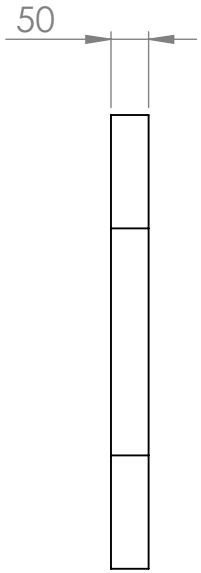
50

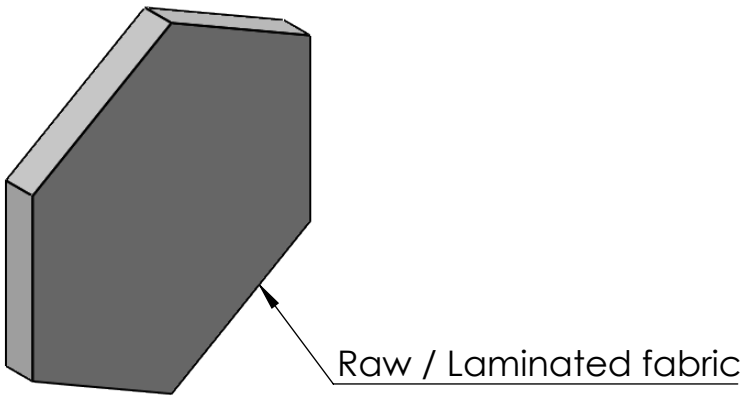
Raw / Laminated fabric