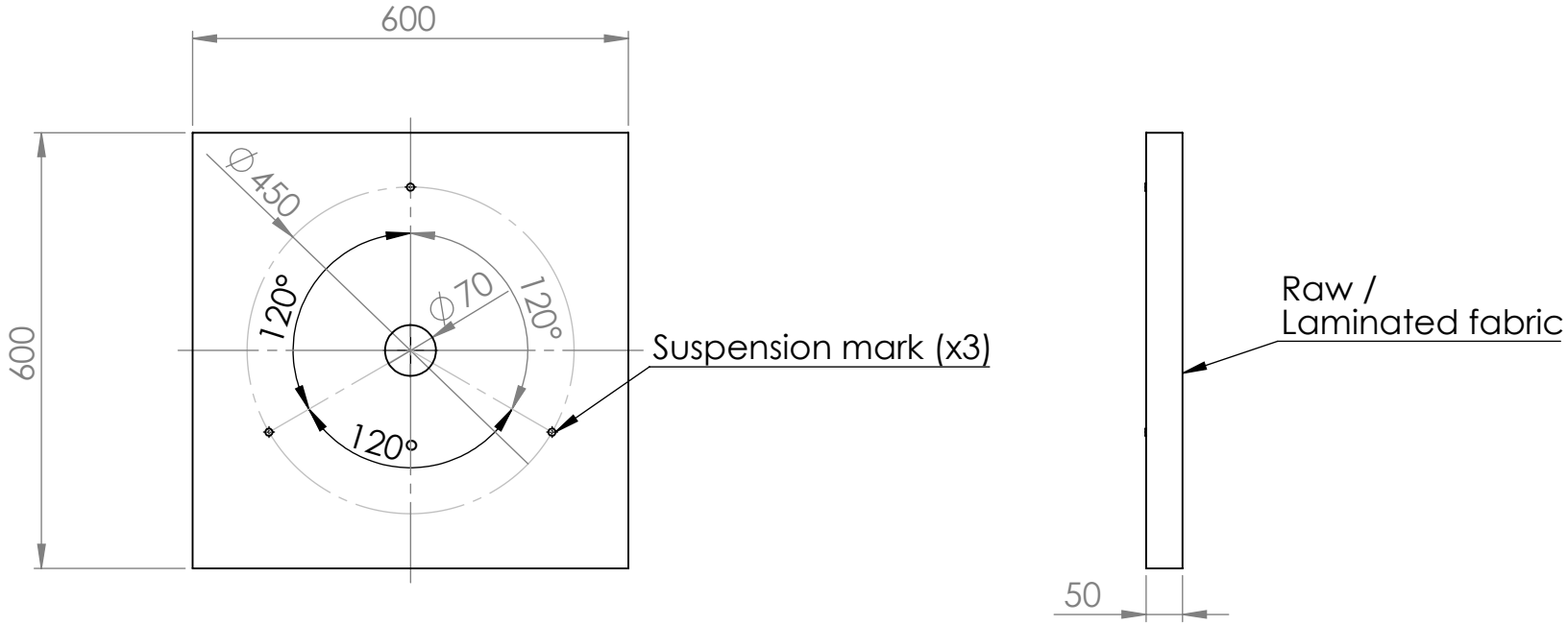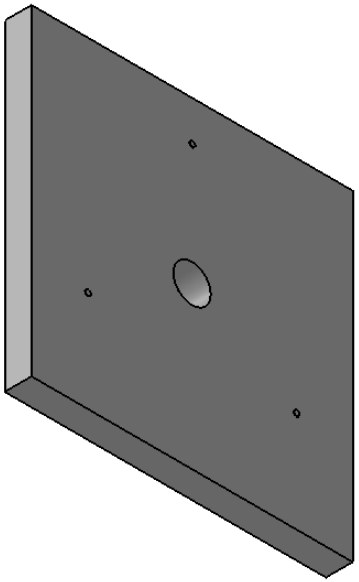
600
600
Ø450
Ø70
120°
120°
120°
Suspension mark (x3)
Raw /
Laminated fabric
50