RENAISSANCE
TILE AND FLOOR

PRODUCT
TUSCANY 3X12 ZOCCOLO MUD BULLNOSE

3"x12" | Terracotta

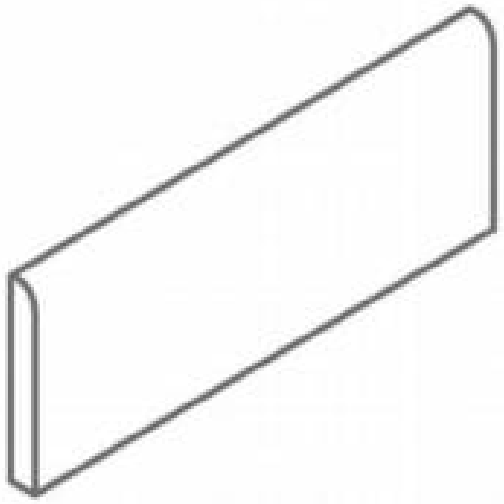

1250 Easton Rd, Ste 100, Horsham, PA 19044
Tel./Phone: 215-674-4848 Fax: email: sales@renaissancetileandfloor.com ceramictileandmarble.com

TECHNICAL DATA

CODE: QUTC-MU-SB
NAME: Tuscany 3x12 Zoccolo Mud Bullnose
SERIES: Tuscany
SIZE: 3"x12"
FINISH: Matt
LOOK: Terracotta
FROST RESISTANCE: Yes
PEI: 4
SUITABLE FOR: Indoor| Outdoor| Pool
TYPOLOGY: Extruded Porcelain
TYPE OF PIECE: Bullnose
USE: Floor and Wall

Results shown represent a rough approximation. This document does not constitute a contractual relationship. To place orders or check product availability, please contact the company.

PACKING

		BOX			PALLET		
Size	Product type	pcs	sqft	lb	boxes	sqft	lb
3"x12"	Bullnose	30			56		

WARNING The information contained in this packing list is for guidance only, the contents of the packing may vary. Please consult our sales representatives for an exact list.